K-BKR EINTEILIG VA

Ball valves

Savybės

Darbinis slėgis	max. 55 bar (depending on connection size and temperature)
Darbinė temperatūra	Max. 150 °C
Tarpiklis	PTFE
Rankinė svirtis	Stainless steel 1.4301

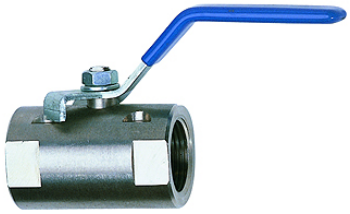

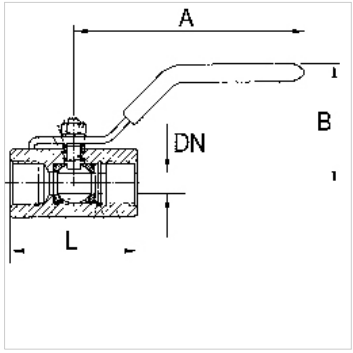

Nuoroda

G thread acc. to DIN EN ISO 228-1, with ISO flange plate (acc. to ISO 5211)
Daugiau duomenų pagal užklausimą.

Aprašas

Full bore with G 1/4 to G 3/8, reduced bore with G 1/2 to G 2

užsakymo nuorodos

For use on devices that have to be vented whenever they are turned off, either because of safety regulations or for technical reasons. The pneumatic devices are disconnected from the system and simultaneously vented each time they are shut off.

Prekė

Pavadinimas	DN	Sriegis	A (mm)	B (mm)	L (mm)	Medžiaga
K- 07 30 14 94	5	G 1/4	60,0	30,0	39,8	Stainless steel 1.4401/1.4408
K- 07 30 14 95	7	G 3/8	80,0	33,0	44,8	Stainless steel 1.4401/1.4408
K- 07 30 14 96	9	G 1/2	110,0	57,0	56,5	Stainless steel 1.4401/1.4408
K- 07 30 14 97	13	G 3/4	110,0	61,0	60,0	Stainless steel 1.4401/1.4408
K- 07 30 14 98	15	G 1	124,0	70,0	70,0	Stainless steel 1.4401/1.4408
K- 07 30 14 99	20	G 1 1/4	152,0	75,0	77,6	Stainless steel 1.4401/1.4408
K- 07 30 15 00	25	G 1 1/2	150,0	80,0	87,0	Stainless steel 1.4401/1.4408
K- 07 30 15 01	32	G 2	155,0	85,0	102,0	Stainless steel 1.4401/1.4408

Nepaisant kruopštaus patikrinimo, negalime atmesti klaidų tikimybės, todėl už esamus duomenis neatsakome.