K-DRG DRVS HANSA

Pressure regulators with continuous pressure supply

Savybės

Įėjimo slėgis	Max. 16 bar
Temperatūros diapazonas	-10 °C to +50 °C
Medžiagos	suslėgtas oras
Jungties sriegiai	Material: Die-cast zinc
Korpusas	Material: Grivory® (PA 66)
Membrana	NBR
Savasis oro sunaudojimas	only G3/4, G1 Max. 1.5 l/min (depending on secondary pressure)
Srauto reikšmės matavimas	At P1 = 10 bar, P2 = 6.3 bar and pressure drop Δp = 1 bar



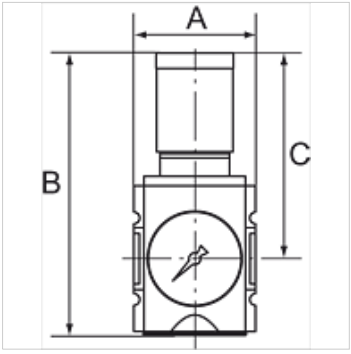

Nuoroda

Daugiau duomenų pagal užklausimą.

Aprašas

Diaphragm pressure regulators with self-relieving design and excellent flow ratesin modern design for mounting side by side. By assembling two or more controllers together, it is possible to supply several working air circuits with different output pressures via a single supply line. The regulator button can be latched and locked.

užsakymo nuorodos

The price does not include a key lock. Please order separately.

Prekė

Pavadinimas	Sriegis	Reguliavimo diapazonas	Srautas (L/min)	A (mm)	B	C (mm)	Gaminio dydis
K- 07 25 02 51	G 1/4	0.1 - 1 bar	2200	52,0	128,5 mm	95,5	1
K- 07 25 02 52	G 1/4	0.1 - 2 bar	2200	52,0	128,5 mm	95,5	1
K- 07 25 02 53	G 1/4	0.2 - 4 bar	2200	52,0	128,5 mm	95,5	1
K- 07 25 02 54	G 1/4	0.5 - 8 bar	2200	52,0	128,5 mm	95,5	1
K- 07 25 02 55	G 1/4	0.5 - 10 bar	2200	52,0	128,5 mm	95,5	1
K- 07 25 02 56	G 1/4	0.5 - 16 bar	2200	52,0	128,5 mm	95,5	1
K- 07 25 02 69	G 3/8	0.1 - 1 bar	2600	52,0	128,5 mm	95,5	1
K- 07 25 02 70	G 3/8	0.1 - 2 bar	2600	52,0	128,5 mm	95,5	1
K- 07 25 02 71	G 3/8	0.2 - 4 bar	2600	52,0	128,5 mm	95,5	1
K- 07 25 02 72	G 3/8	0.5 - 8 bar	2600	52,0	128,5 mm	95,5	1
K- 07 25 02 73	G 3/8	0.5 - 10 bar	2600	52,0	128,5 mm	95,5	1
K- 07 25 02 74	G 3/8	0.5 - 16 bar	2600	52,0	128,5 mm	95,5	1
K- 07 25 02 57	G 3/8	0.1 - 1 bar	4300	63,0	149,5 mm	110,0	2
K- 07 25 02 58	G 3/8	0.1 - 2 bar	4300	63,0	149,5 mm	110,0	2
K- 07 25 02 59	G 3/8	0.2 - 4 bar	4300	63,0	149,5 mm	110,0	2
K- 07 25 02 60	G 3/8	0.5 - 8 bar	4300	63,0	149,5 mm	110,0	2
K- 07 25 02 61	G 3/8	0.5 - 10 bar	4300	63,0	149,5 mm	110,0	2
K- 07 25 02 62	G 3/8	0.5 - 16 bar	4300	63,0	149,5 mm	110,0	2
K- 07 25 02 63	G 1/2	0.1 - 1 bar	5000	63,0	149,5 mm	110,0	2
K- 07 25 02 64	G 1/2	0.1 - 2 bar	5000	63,0	149,5 mm	110,0	2
K- 07 25 02 65	G 1/2	0.2 - 4 bar	5000	63,0	149,5 mm	110,0	2
K- 07 25 02 66	G 1/2	0.5 - 8 bar	5000	63,0	149,5 mm	110,0	2
K- 07 25 02 67	G 1/2	0.5 - 10 bar	5000	63,0	149,5 mm	110,0	2
K- 07 25 02 68	G 1/2	0.5 - 16 bar	5000	63,0	149,5 mm	110,0	2

Priedai

K-STECKSCHLOSS	Key lock

Atsarginės dalys

K-HALTERBAUSATZ HANSA	Holder HANSA
K-SCHALTTAFELMUTTER HANSA	Nut HANSA
K-DICHTSATZ HANSA	Set of seals HANSA