K-FI REGL METALLBEHAE S MANO VARIOB

Filter regulators with metal bowl, incl. sight glass and pressure gauge

Savybės

Įėjimo slėgis	Max. 16 bar (polycarbonate bowl), Max. 20 bar (metal bowl)
Medžiagos temperatūra	max. 50 °C
Aplinkos temperatūra	Max. 50 °C (polycarbonate bowl), Max. 80 °C (metal bowl)
Porų plotis filtro elemente	40 µm
Sandarinimo medžiaga	NBR
Spyruoklės gaubtas	POM
Korpusas	Die-cast zinc
Membrana	NBR
Drain valve	Manual
Srauto reikšmės matavimas	At P1 = 10 bar, P2 = 6 bar and pressure drop Δp = 1 bar



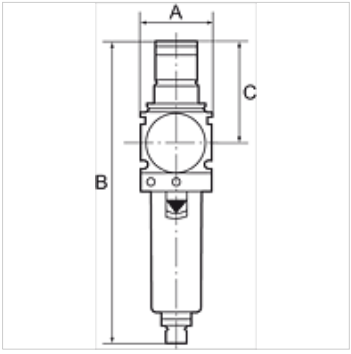

Nuoroda

Daugiau duomenų pagal užklausimą.

Aprašas

Reversible diaphragm pressure regulators, independent of inlet pressure, with self-relieving design, combined with a centrifugal separator. The pressure setting can be locked by pushing the knob down. Approved series in modern industrial design, with the following key benefits: Simple handling, Convenient modular assembly thanks to innovative fasteners, Excellent flow values.

užsakymo nuorodos

Filter regulators are also available with bowl guard or metal bowl. Filter regulators are also available in lockable version. Please ask for more information.

Papildoma informacija

Filter regulators are also available with bowl guard or metal bowl. Filter regulators are also available in lockable version. Please ask for more information.

Prekė

Pavadinimas	Sriegis	Reguliavimo diapazonas	Srautas (L/min)	A (mm)	B	C (mm)
K- 07 25 06 86	G 1/4	0.5 - 10 bar	2000	48,0	203,0 mm	68,0
K- 07 25 06 88	G 3/8	0.5 - 10 bar	3000	48,0	203,0 mm	68,0
K- 07 25 06 90	G 1/2	0.5 - 10 bar	5500	70,0	273,0 mm	98,0
K- 07 25 06 92	G 3/4	0.5 - 10 bar	6500	70,0	273,0 mm	98,0
K- 07 25 06 94	G 1	0.5 - 10 bar	6500	124,0	273,0 mm	98,0

Atsarginės dalys

K-VERSCHLEI-SATZ VARIOBLOC	Set of wearing parts
K-ERSATZBEHAELTER VARIOBLOC POLY	Spare tank Polycarbonat
K-FILTERELEMENT VARIOBLOC	Filter element
K-ABLASSVENTIL AUTO	Fully-automatic drain valve with Adapter G 1/8

Nepaisant kruopštaus patikrinimo, negalime atmesti klaidų tikimybės, todėl už esamus duomenis neatsakome.