K-ZFL ABSP-KLAPPEN DOPPEL

Butterfly valves, with double-acting actuator, min. pilot pressure 5 bar

HANSA FLEX

Savybės

Konstrukcija	Pneumatic actuators, in double- or single acting version
Darbinis slėgis	Max. 16 bar
Darbinė temperatūra	-15 °C to +120 °C
Medžiagos	Water / steam, salt water, salt water, ester, ketone, alkali, caustic soda, sodium hydroxide. Not recommended for hydrocarbons
Valdymo slėgis	5.5 bar
Vožtuvo adapteris	Supplied as standard, operated by a 3/2- or 5/2-way valve
Sukimo kampas	90 °
Pavara	aluminium eloxed
Pavaros sandariklis	NBR
Korpusas	Grey cast iron GG25 epoxy resin coated, RAL 5015
Tarpiklis	EPDM
Velenas	SS416
Veleno sandariklis	EPDM
Valdymas	



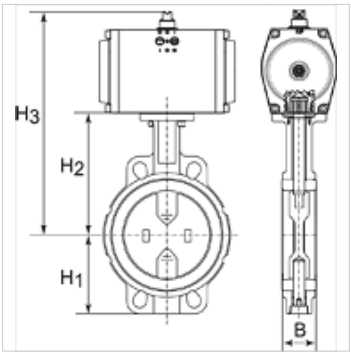

Nuoroda

Daugiau duomenų pagal užklausimą.

Prekė

Pavadinimas	Poveržlė	DN	B (mm)	H1 (mm)	H2 (mm)	H3 (mm)	L (mm)
K- 07 30 03 28	Stainless Steel CF8M/1.4404	40	38,0	68,0	108,0	212,0	94,0
K- 07 30 03 29	Stainless Steel CF8M/1.4404	50	47,0	71,0	143,0	247,0	100,0
K- 07 30 03 30	Stainless Steel CF8M/1.4404	65	49,0	78,0	155,0	259,0	115,0
K- 07 30 03 31	Stainless Steel CF8M/1.4404	80	47,0	89,0	162,0	280,0	127,0
K- 07 30 03 32	Stainless Steel CF8M/1.4404	100	56,0	102,0	178,0	308,0	163,0
K- 07 30 03 33	Stainless Steel CF8M/1.4404	125	59,0	123,0	191,0	321,0	190,0
K- 07 30 03 35	Stainless Steel CF8M/1.4404	150	59,0	138,0	205,0	352,0	216,0

Nepaisant kruopštaus patikrinimo, negalime atmesti klaidų tikimybės, todėl už esamus duomenis neatsakome.