K-WTEH 3-TLG PC SCHU VARIOBLOC

Service units, 3-piece with polycarbonate bowl and bowl guard

HANSA-FLEX

Savybės

Įėjimo slėgis	Max. 16 bar (polycarbonate bowl), Max. 20 bar (metal bowl)
Medžiagos temperatūra	max. 50 °C
Aplinkos temperatūra	Max. 50 °C (polycarbonate bowl), Max. 80 °C (metal bowl)
Porų plotis filtro elemente	40 µm
Sandarinimo medžiaga	NBR
Spyruoklės gaubtas	POM
Korpusas	Die-cast zinc
Membrana	NBR
Lašėjimo antgalis	PA
Drain valve	Manual
Srauto reikšmės matavimas	At P1 = 10 bar, P2 = 6 bar and pressure drop Δp = 1 bar



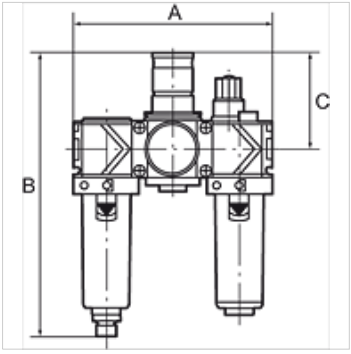

Nuoroda

Daugiau duomenų pagal užklausimą.

Aprašas

Two or three-piece service units consisting of a reversible diaphragm pressure regulator, independent of inlet pressure, with self-relieving design, combined with a centrifugal separator and a proportional lubricator. Approved series in modern industrial design, with the following key benefits: Simple handling, Convenient modular assembly thanks to innovative fasteners, Excellent flow values.

užsakymo nuorodos

Service units are also available with bowl guard or metal bowl. Service units are also available in other control ranges (0.5 - 6 bar and 0.5 - 16 bar) and in lockable version. Please ask for more information.

Papildoma informacija

Service units are also available with bowl guard or metal bowl. Service units are also available in other control ranges.

Prekė

Pavadinimas	Sriegis	Reguliavimo diapazonas	Srautas (L/min)	A (mm)	B	C (mm)
K- 07 25 22 86	G 1/4	0.5 - 10 bar	1500	144,0	201,0 mm	68,0
K- 07 25 22 85	G 3/8	0.5 - 10 bar	1800	144,0	201,0 mm	68,0
K- 07 25 22 84	G 1/2	0.5 - 10 bar	3400	210,0	247,0 mm	98,0
K- 07 25 22 83	G 3/4	0.5 - 10 bar	5000	210,0	247,0 mm	98,0
K- 07 25 22 82	G 1	0.5 - 10 bar	5000	264,0	247,0 mm	98,0

Nepaisant kruopštaus patikrinimo, negalime atmesti klaidų tikimybės, todėl už esamus duomenis neatsakome.