K-ROHRFLANSCH ALU INFI

Pipe flange according to UNI EN 1092 - 4 PN 16 made of aluminium

HANSA-FLEX

Savybės

Medžiaga	Aluminium surface treated



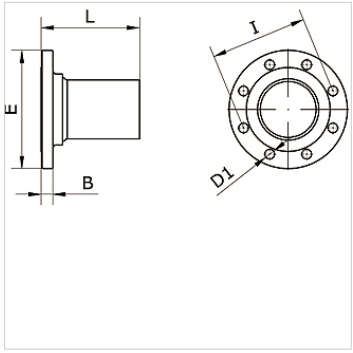

Prekė

Pavadinimas	Vamzdžio išorinis Ø	B (mm)	D1 (mm)	E (mm)	I (mm)	L (mm)
K- 07 40 55 11	80 mm	20,0	18,0	200,0	160,0	155,0
K- 07 40 54 58	110 mm	18,0	18,0	220,0	180,0	183,0