K-WTEH 2-TEILIG HANSA PRO

2-part service unit, with manual/semi-automatic condensate drain and pressure gauge, HANSA PRO

HANSA FLEX

Savybės

Išėjimo slėgis	Pa 0,5 - 8 bar (Standart)Pa 0,1 - 1 barPa 0,1 - 2 barPa 0,2 - 4 barPa 0,5 - 10 barPa 0,5 - 16 bar
Medžiagos temperatūra	-10 °C to +50 °C
Aplinkos temperatūra	-10 °C to +50 °C
Medžiagos	suslėgtas oras
Konstrukcija	Diaphragm pressure regulator with relieving, centrifugal filter, mist lubricator
Pritvirtinimo rūšis	Line mounting, panel mounting, mounting kit or wall mounting
Aktyvinimas / apsauga	lockable handwheel
Sumontavimo padėtis	Vertical, drain down
Filtravimo blokas	5,00 µm
Manometro jungtis	G 1/4 i
maks. kondensato kiekis	49 cc
maks. alyvos pripildymo kiekis	80 cc
Nominalusis srautas G 1/2	3.500 l/min (P1 = 10 bar, P2 = 6,3 bar/ Delta P = 1 bar)
Nominalusis srautas G 3/8	3.500 l/min (P1 = 10 bar, P2 = 6,3 bar/ Delta P = 1 bar)
Alyvos dozav. esant qv = 1000 l/min	1-2 drops / min (guideline)
PE maks. 12	16 bar
Filtravimo elementas	Cellpor
Korpusas	PA66
Membrana, sandarikliai	Ms/NBR/PA6
Lašėjimo antgalis	Polycarbonate
Alyvos rūšis	CL 32 acc. to DIN 51517 - ISO VG 32



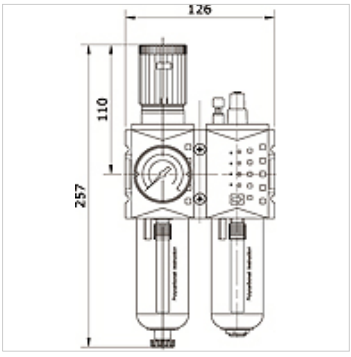

Prekė

Pavadinimas	Jungtis	Reguliavimo diapazonas	Indikatorių sritys	Rezervuaras	Gaminio dydis	Kondensato išleidimas
K- 07 25 21 88	G 3/8 i	0.1 - 1 bar	0 - 1,6 bar	polycarbonate with protective cage	2	manual / semi-automatic
K- 07 25 21 89	G 3/8 i	0.1 - 2 bar	0 - 2,5 bar	polycarbonate with protective cage	2	manual / semi-automatic
K- 07 25 21 90	G 3/8 i	0.2 - 4 bar	0 - 6 bar	polycarbonate with protective cage	2	manual / semi-automatic
K- 07 25 21 91	G 3/8 i	0.5 - 8 bar	0 - 10 bar	polycarbonate with protective cage	2	manual / semi-automatic
K- 07 25 21 92	G 3/8 i	0.5 - 10 bar	0 - 16 bar	polycarbonate with protective cage	2	manual / semi-automatic
K- 07 25 21 93	G 3/8 i	0.5 - 16 bar	0 - 25 bar	polycarbonate with protective cage	2	manual / semi-automatic
K- 07 25 21 94	G 1/2 i	0.1 - 1 bar	0 - 1,6 bar	polycarbonate with protective cage	2	manual / semi-automatic
K- 07 25 21 95	G 1/2 i	0.1 - 2 bar	0 - 2,5 bar	polycarbonate with protective cage	2	manual / semi-automatic
K- 07 25 21 96	G 1/2 i	0.2 - 4 bar	0 - 6 bar	polycarbonate with protective cage	2	manual / semi-automatic
K- 07 25 21 97	G 1/2 i	0.5 - 8 bar	0 - 10 bar	polycarbonate with protective cage	2	manual / semi-automatic
K- 07 25 21 98	G 1/2 i	0.5 - 10 bar	0 - 16 bar	polycarbonate with protective cage	2	manual / semi-automatic
K- 07 25 21 99	G 1/2 i	0.5 - 16 bar	0 - 25 bar	polycarbonate with protective cage	2	manual / semi-automatic
K- 07 25 22 00	G 3/8 i	0.1 - 1 bar	0 - 1,6 bar	zinc with visual display	2	manual / semi-automatic
K- 07 25 22 01	G 3/8 i	0.1 - 2 bar	0 - 2,5 bar	zinc with visual display	2	manual / semi-automatic
K- 07 25 22 02	G 3/8 i	0.2 - 4 bar	0 - 6 bar	zinc with visual display	2	manual / semi-automatic
K- 07 25 22 03	G 3/8 i	0.5 - 8 bar	0 - 10 bar	zinc with visual display	2	manual / semi-automatic
K- 07 25 22 04	G 3/8 i	0.5 - 10 bar	0 - 16 bar	zinc with visual display	2	manual / semi-automatic
K- 07 25 22 05	G 3/8 i	0.5 - 16 bar	0 - 25 bar	zinc with visual display	2	manual / semi-automatic
K- 07 25 22 06	G 1/2 i	0.1 - 1 bar	0 - 1,6 bar	zinc with visual display	2	manual / semi-automatic
K- 07 25 22 07	G 1/2 i	0.1 - 2 bar	0 - 2,5 bar	zinc with visual display	2	manual / semi-automatic
K- 07 25 22 08	G 1/2 i	0.2 - 4 bar	0 - 6 bar	zinc with visual display	2	manual / semi-automatic
K- 07 25 22 09	G 1/2 i	0.5 - 8 bar	0 - 10 bar	zinc with visual display	2	manual / semi-automatic
K- 07 25 22 10	G 1/2 i	0.5 - 10 bar	0 - 16 bar	zinc with visual display	2	manual / semi-automatic
K- 07 25 22 11	G 1/2 i	0.5 - 16 bar	0 - 25 bar	zinc with visual display	2	manual / semi-automatic

Nepaisant kruopštaus patikrinimo, negalime atmesti klaidų tikimybės, todėl už esamus duomenis neatsakome.