# K-PRAEZI DRUCKREGLER SELU

Precision pressure regulators

## Īpašības

| | |
|---|---|
| **Ieejas spiediens** | Max. 16 bar |
| **Vielas temperatūra** | max. 60 °C |
| **Vides temperatūra** | Max. 60 °C |
| **Darba vides** | Micro-filtered, unoiled compressed air (0.01 µm) |
| **Manometra pieslēgums** | G 1/4 |
| **Atgaisošanas pieslēgums** | G 3/8 (for mounting a silencer) |
| **Blīvēšanas materiāls** | NBR |
| **Korpuss** | Die-cast zinc |
| **Iekšējā gaisa patēriņš** | 1.5 - 6 l/min, depending on input pressure and control range |



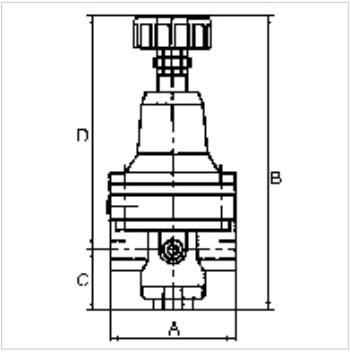


## Norāde

The given flow rates are based on the following parameters: 1200 l/min: P1: 5 bar, P2: 3 bar, Δp ≤ 0.1 bar
1400 l/min: P1: 7 bar, P2: 5 bar, Δp ≤ 0.1 bar
1500 l/min: P1: 10 bar, P2: 7 bar, Δp ≤ 0.1 bar. Wear parts kit not supplied! Pressure regulator may only be opened in the factory!
Citi dati pieejami pēc pieprasījuma.

## Apraksts

With high flow rate and large secondary relief port. Diaphragm pressure regulators with large secondary relief port for applications requiring an extremely accurate working pressure, especially at high flow rates.

## Papildu informācija

on Art. K-07250721: Max. inlet pressure 300 bar. Other cylinder pressure regulators available on request.
1500 l/min: P1: 10 bar, P2: 7 bar, Δp ≤ 0.1 bar.

## Izstrādājums

| Apzīmējums | Vītnes | Regulēšanas diapazons | Caurplūde (L/min) | A (mm) | C (mm) | D (mm) |
|---|---|---|---|---|---|---|
| **K- 07 25 09 28** | G 1/4 | 0.05 - 3 bar | 700 | 82,0 | 43,5 | 159,0 |
| **K- 07 25 09 29** | G 1/4 | 0.05 - 7 bar | 1500 | 82,0 | 43,5 | 159,0 |
| **K- 07 25 09 30** | G 3/8 | 0.05 - 3 bar | 3000 | 82,0 | 43,5 | 159,0 |
| **K- 07 25 09 31** | G 3/8 | 0.05 - 7 bar | 5500 | 82,0 | 43,5 | 159,0 |
| **K- 07 25 09 32** | G 1/2 | 0.05 - 3 bar | 3000 | 82,0 | 43,5 | 159,0 |
| **K- 07 25 09 33** | G 1/2 | 0.05 - 5 bar | 4500 | 82,0 | 43,5 | 159,0 |
| **K- 07 25 09 34** | G 1/2 | 0.05 - 7 bar | 5500 | 82,0 | 43,5 | 159,0 |

## Rezerves daļas

| | |
|---|---|
| **K-HALTERBAUSATZ STANDARD** | Holder |
| **K-KM MS** | Hexagonal lock nuts, brass |
| **K-SCHALLDAEPFER VYON** | Vyon silencers |
| **K-FILTERELEMENT** | Filter element |
| **K-XV AGM 2** | Double nipples, parallel male thread |

*Neskatoties uz rūpīgu pārbaudi, mēs nevaram izslēgt kļūdas un negarantējam iekļautās informācijas pareizību.*