K-FI SPEZI PC-BEHAELTER H STANDAD

Special filters with polycarbonate bowl, with semi-automatic drain valve to G 1/2 and manual drain valve from G 3/4

Īpašības

Ieejas spiediens	Max. 16 bar (polycarbonate bowl / bowl guard), Max. 25 bar (metal bowl)
Vielas temperatūra	max. 50 °C
Vides temperatūra	Max. 50 °C
Iedarbības pakāpe	99.999 %
Poru attālums filtra elementā	0.01 µm
Korpuss	Die-cast zinc, painted silver
Caurplūdes vērtības mērījums	At P2 = 6 bar and pressure drop Δp = 1 bar



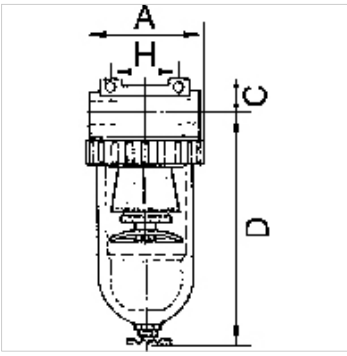

Norāde

Citi dati pieejami pēc pieprasījuma.

Apraksts

For all applications with particularly strict compressed air purity requirements. The separating efficiency of these filters permits very fine oil vapour particles and micro-fine suspended particles to be filtered. A standard filter should always be connected upstream to trap coarse impurities and protect the micro-filter inserts.

Izstrādājums

Apzīmējums	Vītnes	Caurplūde (L/min)	A (mm)	C (mm)	D (mm)	H (mm)	DN
K- 07 25 10 76	G 3/8	380	48,0	14,0	131,6	38,0	6
K- 07 25 10 83	G 3/4	7000	133,0	36,0	206,0	134,0	20
K- 07 25 10 86	G 1	7000	133,0	36,0	206,0	120,0	25

Rezerves daļas

K-HALTERBAUSATZ STANDARD	Holder
K-FILTERELEMENT STANDARD	Filter element
K-SCHUTZKORB G	Protective cage
K-XV AGM MS NI	Double nipples, parallel male thread, nickel-plated brass
K-LOESBARE DOPPELNIPPEL MS	Double nipples

Neskatoties uz rūpīgu pārbaudi, mēs nevaram izslēgt kļūdas un negarantējam iekļautās informācijas pareizību.