K-BKR KL SERIE 375

Ball valves, 375 series

Īpašības

Ekspluatācijas spiediens	max. 70 bar (depending on temperature and nominal size)
Standartvērtības	G 1/4 to G 1: 20 °C: 70 bar, 60 °C: 65 bar, 100 °C: 45 bar, 150 °C: 7 bar, 180 °C: 4 bar, 200 °C: 0 bar G 1 1/4 to G 1 1/2: 20 °C: 70 bar, 60 °C: 55 bar, 100 °C: 35 bar, 150 °C: 7 bar, 180 °C: 4 bar, 200 °C: 0 bar G 2: 20 °C: 60 bar, 60 °C: 40 bar, 10
Ekspluatācijas temperatūra	200 °C at 0 bar
Blīvējums	15 % RPTFE (glass fibre reinforced PTFE)
Svira	Stainless steel 1.4301

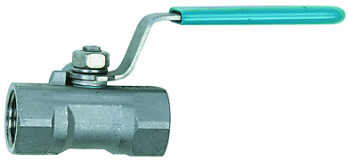

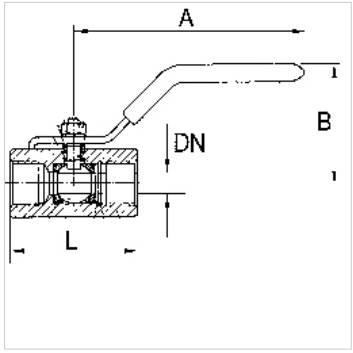

Norāde

G thread acc. to DIN EN ISO 228-1, with ISO flange plate (acc. to ISO 5211)
Citi dati pieejami pēc pieprasījuma.

Pasūtījuma norādes

For use on devices that have to be vented whenever they are turned off, either because of safety regulations or for technical reasons. The pneumatic devices are disconnected from the system and simultaneously vented each time they are shut off.

Papildu informācija

G thread acc. DIN EN ISO 228-1

Izstrādājums

Apzīmējums	DN	Vītnes	A (mm)	B (mm)	L (mm)	Materiāls
K- 07 30 15 36	5	G 1/4	69,0	34,0	39,0	Stainless steel 1.4401/1.4408
K- 07 30 15 37	7	G 3/8	83,0	38,0	44,0	Stainless steel 1.4401/1.4408
K- 07 30 15 38	10	G 1/2	96,0	41,0	59,0	Stainless steel 1.4401/1.4408
K- 07 30 15 39	13	G 3/4	96,0	45,0	60,0	Stainless steel 1.4401/1.4408
K- 07 30 29 80	16	G 1	116,0	52,0	72,0	Stainless steel 1.4401/1.4408
K- 07 30 29 81	20	G 1 1/4	116,0	57,0	77,0	Stainless steel 1.4401/1.4408
K- 07 30 29 82	25	G 1 1/2	158,0	62,0	84,0	Stainless steel 1.4401/1.4408
K- 07 30 29 83	32	G 2	158,0	68,0	100,0	Stainless steel 1.4401/1.4408

Neskatoties uz rūpīgu pārbaudi, mēs nevaram izslēgt kļūdas un negarantējam iekļautās informācijas pareizību.