# K-WTEH 3-TLG PC SCHU WAND V G

Service units, 3-piece with polycarbonate bowl, bowl guard and joiner for wall mounting, fully-automatic drain valve

## Īpašības

| | |
|---|---|
| **Ieejas spiediens** | Max. 10 bar |
| **Vielas temperatūra** | max. 70 °C |
| **Vides temperatūra** | Max. 70 °C |
| **Poru attālums filtra elementā** | 5 µm |
| **Blīvēšanas materiāls** | NBR |
| **Atsperes korpuss** | POM |
| **Korpuss** | Die-cast aluminium |
| **Pilienu aizsargs** | Brass/POM |
| **Drain valve** | Semi- or fully-automatic |
| **Caurplūdes vērtības mērījums** | At P1 = 8 bar, P2 = 6 bar and pressure drop Δp = 1 bar |
| **Papildu dati** | User manual on request |



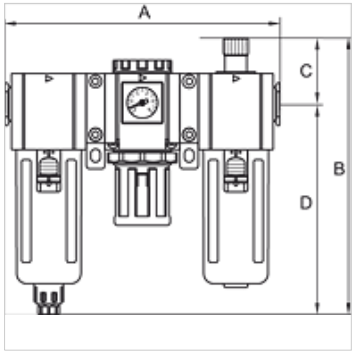


## Izstrādājums

| Apzīmējums | Vītnes | Regulēšanas diapazons | Caurplūde (L/min) | A (mm) | B | C (mm) | D (mm) | Tipizmērs |
|---|---|---|---|---|---|---|---|---|
| **K- 07 25 14 22** | G 1/4 | 1.5 - 9 bar | 1100 | 179,0 | 187,0 mm | 44,0 | 143,0 | 300 |
| **K- 07 25 14 24** | G 3/8 | 1.5 - 9 bar | 1400 | 179,0 | 187,0 mm | 44,0 | 143,0 | 300 |
| **K- 07 25 14 26** | G 1/2 | 1.5 - 9 bar | 1400 | 179,0 | 187,0 mm | 44,0 | 143,0 | 300 |
| **K- 07 25 14 28** | G 3/8 | 1.5 - 9 bar | 2950 | 236,0 | 214,5 mm | 48,0 | 166,5 | 400 |
| **K- 07 25 14 30** | G 1/2 | 1.5 - 9 bar | 2950 | 236,0 | 214,5 mm | 48,0 | 166,5 | 400 |

## Piederumi

| | |
|---|---|
| **K-VERSCHLEI-SATZ** | Set of wearing parts |
| **K-ERSATZMEMBRANE** | Replacement diaphragm |
| **K-ADAPTERPLATTEN HANSA** | Adapter plate HANSA |
| **K-SCHUTZKORB G** | Protective cage |
| **K-FILTERELEMENT** | Filter element |
| **K-ERSATZBEHAELTER G UND G-MINI POLY** | Spare tanks »G« Series and »G-mini« Series Polycarbonat |
| **K-VERBINDUNGELEMENTE** | Connecting sets |
| **K-WANDHALTER** | Wall bracket |

*Neskatoties uz rūpīgu pārbaudi, mēs nevaram izslēgt kļūdas un negarantējam iekļautās informācijas pareizību.*