K-WTEH 2-TLG PC SCHU VARIOBLOC

Service units, 2-piece with polycarbonate bowl and bowl guard

Īpašības

Ieejas spiediens	Max. 16 bar (polycarbonate bowl), Max. 20 bar (metal bowl)
Vielas temperatūra	max. 50 °C
Vides temperatūra	Max. 50 °C (polycarbonate bowl), Max. 80 ° C (metal bowl)
Poru attālums filtra elementā	40 µm
Blīvēšanas materiāls	NBR
Atsperes korpuss	POM
Korpuss	Die-cast zinc
Membrāna	NBR
Pilienu aizsargs	PA
Drain valve	Manual
Caurplūdes vērtības mērījums	At P1 = 10 bar, P2 = 6 bar and pressure drop Δp = 1 bar



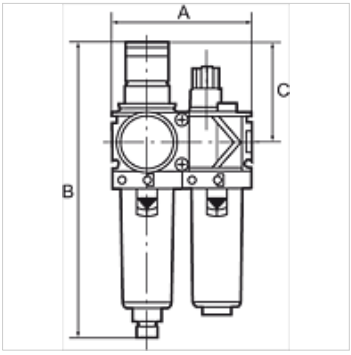

Norāde

Citi dati pieejami pēc pieprasījuma.

Apraksts

Two or three-piece service units consisting of a reversible diaphragm pressure regulator, independent of inlet pressure, with self-relieving design, combined with a centrifugal separator and a proportional lubricator. Approved series in modern industrial design, with the following key benefits: Simple handling, Convenient modular assembly thanks to innovative fasteners, Excellent flow values.

Pasūtījuma norādes

Service units are also available with bowl guard or metal bowl. Service units are also available in other control ranges (0.5 - 6 bar and 0.5 - 16 bar) and in lockable version. Please ask for more information.

Papildu informācija

Service units are also available with bowl guard or metal bowl. Service units are also available in other control ranges.

Izstrādājums

Apzīmējums	Vītnes	Regulēšanas diapazons	Caurplūde (L/min)	A (mm)	B	C (mm)
K- 07 25 22 81	G 1/4	0.5 - 10 bar	1500	96,0	203,0 mm	68,0
K- 07 25 22 80	G 3/8	0.5 - 10 bar	1800	96,0	203,0 mm	68,0
K- 07 25 22 79	G 1/2	0.5 - 10 bar	3400	140,0	273,0 mm	98,0
K- 07 25 22 78	G 3/4	0.5 - 10 bar	5000	140,0	273,0 mm	98,0
K- 07 25 22 77	G 1	0.5 - 10 bar	5000	194,0	273,0 mm	98,0

Neskatoties uz rūpīgu pārbaudi, mēs nevaram izslēgt kļūdas un negarantējam iekļautās informācijas pareizību.