K-WTEH 2-TEILIG HANSA PRO

2-part service unit, with manual/semi-automatic condensate drain and pressure gauge, HANSA PRO

HANSA FLEX

Īpašības

Izejas spiediens	Pa 0,5 - 8 bar (Standart)Pa 0,1 - 1 barPa 0,1 - 2 barPa 0,2 - 4 barPa 0,5 - 10 barPa 0,5 - 16 bar
Vielas temperatūra	-10 °C to +50 °C
Vides temperatūra	-10 °C to +50 °C
Darba vides	Saspiests gaiss
Modelis	Diaphragm pressure regulator with relieving, centrifugal filter, mist lubricator
Stiprinājuma veids	Line mounting, panel mounting, mounting kit or wall mounting
Vadība/drošinātājs	lockable handwheel
Uzstādīšanas stāvoklis	Vertical, drain down
Filtra smalkums	5,00 µm
Manometra pieslēgums	G 1/4 i
maks. kondensāta daudzums	49 cc
maks. eļļas iepildes daudzums	80 cc
Nominālā caurplūde G 1/2	3.500 l/min (P1 = 10 bar, P2 = 6,3 bar/ Delta P = 1 bar)
Nominālā caurplūde G 3/8	3.500 l/min (P1 = 10 bar, P2 = 6,3 bar/ Delta P = 1 bar)
Eļļas dozēšana pie qv=1000 l/min	1-2 drops / min (guideline)
PE maks. 12	16 bar
Filtra elements	Cellpor
Korpuss	PA66
Membrāna, blīvējumi	Ms/NBR/PA6
Pilienu aizsargs	Polycarbonate
Eļļas veids	CL 32 acc. to DIN 51517 - ISO VG 32



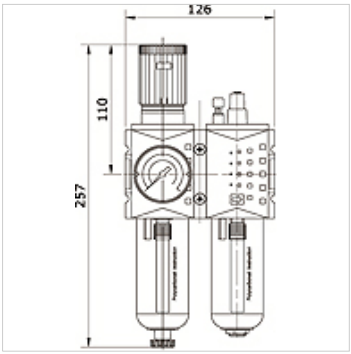

Izstrādājums

Apzīmējums	Savienojums	Regulēšanas diapazons	Indikācijas diapazoni	Tvertne	Tipizmērs	Kondensāta notece
K- 07 25 21 88	G 3/8 i	0.1 - 1 bar	0 - 1,6 bar	polycarbonate with protective cage	2	manual / semi-automatic
K- 07 25 21 89	G 3/8 i	0.1 - 2 bar	0 - 2,5 bar	polycarbonate with protective cage	2	manual / semi-automatic
K- 07 25 21 90	G 3/8 i	0.2 - 4 bar	0 - 6 bar	polycarbonate with protective cage	2	manual / semi-automatic
K- 07 25 21 91	G 3/8 i	0.5 - 8 bar	0 - 10 bar	polycarbonate with protective cage	2	manual / semi-automatic
K- 07 25 21 92	G 3/8 i	0.5 - 10 bar	0 - 16 bar	polycarbonate with protective cage	2	manual / semi-automatic
K- 07 25 21 93	G 3/8 i	0.5 - 16 bar	0 - 25 bar	polycarbonate with protective cage	2	manual / semi-automatic
K- 07 25 21 94	G 1/2 i	0.1 - 1 bar	0 - 1,6 bar	polycarbonate with protective cage	2	manual / semi-automatic
K- 07 25 21 95	G 1/2 i	0.1 - 2 bar	0 - 2,5 bar	polycarbonate with protective cage	2	manual / semi-automatic
K- 07 25 21 96	G 1/2 i	0.2 - 4 bar	0 - 6 bar	polycarbonate with protective cage	2	manual / semi-automatic
K- 07 25 21 97	G 1/2 i	0.5 - 8 bar	0 - 10 bar	polycarbonate with protective cage	2	manual / semi-automatic
K- 07 25 21 98	G 1/2 i	0.5 - 10 bar	0 - 16 bar	polycarbonate with protective cage	2	manual / semi-automatic
K- 07 25 21 99	G 1/2 i	0.5 - 16 bar	0 - 25 bar	polycarbonate with protective cage	2	manual / semi-automatic
K- 07 25 22 00	G 3/8 i	0.1 - 1 bar	0 - 1,6 bar	zinc with visual display	2	manual / semi-automatic
K- 07 25 22 01	G 3/8 i	0.1 - 2 bar	0 - 2,5 bar	zinc with visual display	2	manual / semi-automatic
K- 07 25 22 02	G 3/8 i	0.2 - 4 bar	0 - 6 bar	zinc with visual display	2	manual / semi-automatic
K- 07 25 22 03	G 3/8 i	0.5 - 8 bar	0 - 10 bar	zinc with visual display	2	manual / semi-automatic
K- 07 25 22 04	G 3/8 i	0.5 - 10 bar	0 - 16 bar	zinc with visual display	2	manual / semi-automatic
K- 07 25 22 05	G 3/8 i	0.5 - 16 bar	0 - 25 bar	zinc with visual display	2	manual / semi-automatic
K- 07 25 22 06	G 1/2 i	0.1 - 1 bar	0 - 1,6 bar	zinc with visual display	2	manual / semi-automatic
K- 07 25 22 07	G 1/2 i	0.1 - 2 bar	0 - 2,5 bar	zinc with visual display	2	manual / semi-automatic
K- 07 25 22 08	G 1/2 i	0.2 - 4 bar	0 - 6 bar	zinc with visual display	2	manual / semi-automatic
K- 07 25 22 09	G 1/2 i	0.5 - 8 bar	0 - 10 bar	zinc with visual display	2	manual / semi-automatic
K- 07 25 22 10	G 1/2 i	0.5 - 10 bar	0 - 16 bar	zinc with visual display	2	manual / semi-automatic
K- 07 25 22 11	G 1/2 i	0.5 - 16 bar	0 - 25 bar	zinc with visual display	2	manual / semi-automatic

Neskatoties uz rūpīgu pārbaudi, mēs nevaram izslēgt kļūdas un negarantējam iekļautās informācijas pareizību.