# XVN
Inschroefverbinding

HANSA-FLEX

## Eigenschappen

| | |
|---|---|
| **Aansluiting 1** | NPT-buitendraad |
| **Afdichtingsvorm 1** | draaddichtend |
| **Aansluiting 2** | Metrische buitendraad cilindrisch |
| **Afdichtingsvorm 2** | 24° binnenconus |
| **Constructie** | Inschroefverbinding |
| **Uitvoering** | recht |
| **Norm** | DIN 2353<br>ISO 8434-1 |
| **Leveromvang** | Buissok (zonder wartelmoer en snijring) |
| **Materiaal** | Staal |
| **Oppervlakbescherming** | Galvanisch gecoat |

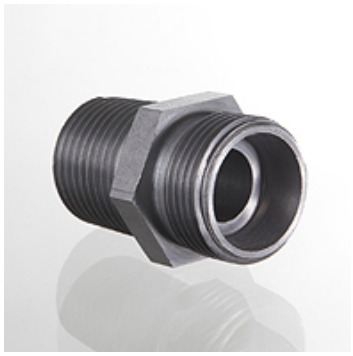

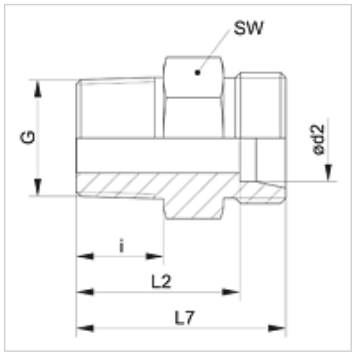


## Aanwijzing

Aanwijzingen voor de montage, inbouw, drukbelasting en toegestane werktemperaturen staan in de technische informatie voor schroefdraadpijpverbindingen.

## Artikel

| Aanduiding | Serie | Werkdruk bar | Ø d2 (mm) | G | i (mm) | L2 (mm) | L7 (mm) | SW (mm) |
|---|---|---|---|---|---|---|---|---|
| **XVN 04 LL** | LL | PN 100 | 4 | 1/8" -27 NPT | 10,0 | 18,0 | 22,0 | 11 |
| **XVN 05 LL** | LL | PN 100 | 5 | 1/8" -27 NPT | 10,0 | 16,5 | 22,0 | 11 |
| **XVN 06 LL** | LL | PN 100 | 6 | 1/8" -27 NPT | 10,0 | 16,5 | 22,0 | 11 |
| **XVN 08 LL** | LL | PN 100 | 8 | 1/8" -27 NPT | 10,0 | 18,5 | 24,0 | 12 |
| | | | | | | | | |
| **XVN NW 04 HL** | L | PN 315 | 6 | 1/8" -27 NPT | 10,0 | 17,0 | 24,0 | 12 |
| **XVN NW 04 HL 1/4** | L | PN 315 | 6 | 1/4" -18 NPT | 15,0 | 23,0 | 30,0 | 17 |
| **XVN NW 04 HL 3/8** | L | PN 315 | 6 | 3/8" -18 NPT | 15,3 | 24,0 | 31,0 | 19 |
| **XVN NW 04 HL 1/2** | L | PN 315 | 6 | 1/2" -14 NPT | 20,0 | 29,0 | 36,0 | 24 |
| **XVN NW 06 HL 1/8** | L | PN 315 | 8 | 1/8" -27 NPT | 10,0 | 18,0 | 25,0 | 17 |
| **XVN NW 06 HL** | L | PN 315 | 8 | 1/4" -18 NPT | 15,0 | 23,0 | 30,0 | 17 |
| **XVN NW 06 HL 3/8** | L | PN 315 | 8 | 3/8" -18 NPT | 15,3 | 24,0 | 31,0 | 19 |
| **XVN NW 06 HL 1/2** | L | PN 315 | 8 | 1/2" -14 NPT | 20,0 | 29,0 | 36,0 | 24 |
| **XVN NW 08 HL 1/8** | L | PN 315 | 10 | 1/8" -27 NPT | 10,0 | 19,0 | 26,0 | 17 |
| **XVN NW 08 HL** | L | PN 315 | 10 | 1/4" -18 NPT | 15,0 | 24,0 | 31,0 | 17 |
| **XVN NW 08 HL 3/8** | L | PN 315 | 10 | 3/8" -18 NPT | 15,3 | 25,0 | 32,0 | 19 |
| **XVN NW 08 HL 1/2** | L | PN 315 | 10 | 1/2" -14 NPT | 20,0 | 30,0 | 37,0 | 24 |
| **XVN NW 10 HL 1/8** | L | PN 315 | 12 | 1/8" -27 NPT | 10,0 | 19,5 | 26,5 | 19 |
| **XVN NW 10 HL 1/4** | L | PN 315 | 12 | 1/4" -18 NPT | 15,0 | 25,0 | 32,0 | 19 |
| **XVN NW 10 HL** | L | PN 315 | 12 | 3/8" -18 NPT | 15,3 | 25,0 | 32,0 | 19 |
| **XVN NW 10 HL 1/2** | L | PN 315 | 12 | 1/2" -14 NPT | 20,0 | 30,0 | 37,0 | 24 |
| **XVN NW 10 HL 3/4** | L | PN 315 | 12 | 3/4" -14 NPT | 20,2 | 31,0 | 38,0 | 27 |
| **XVN NW 13 HL 1/4** | L | PN 315 | 15 | 1/4" -18 NPT | 15,0 | 26,0 | 33,0 | 24 |
| **XVN NW 13 HL 3/8** | L | PN 315 | 15 | 3/8" -18 NPT | 15,3 | 26,5 | 33,5 | 24 |
| **XVN NW 13 HL** | L | PN 315 | 15 | 1/2" -14 NPT | 20,0 | 31,0 | 38,0 | 24 |
| **XVN NW 13 HL 3/4** | L | PN 315 | 15 | 3/4" -14 NPT | 20,2 | 32,0 | 39,0 | 27 |
| **XVN NW 16 HL 1/4** | L | PN 315 | 18 | 1/4" -18 NPT | 15,0 | 26,5 | 34,0 | 27 |
| **XVN NW 16 HL** | L | PN 315 | 18 | 1/2" -14 NPT | 20,0 | 31,5 | 39,0 | 27 |
| **XVN NW 16 HL 3/4** | L | PN 315 | 18 | 3/4" -14 NPT | 20,2 | 31,5 | 39,0 | 27 |
| **XVN NW 20 HL 1/2** | L | PN 160 | 22 | 1/2" -14 NPT | 20,0 | 33,5 | 41,0 | 32 |
| **XVN NW 20 HL** | L | PN 160 | 22 | 3/4" -14 NPT | 20,2 | 33,5 | 41,0 | 32 |
| **XVN NW 25 HL** | L | PN 160 | 28 | 1" -11,5 NPT | 25,0 | 39,5 | 47,0 | 41 |
| **XVN NW 32 HL 1** | L | PN 160 | 35 | 1" -11,5 NPT | 25,0 | 40,0 | 50,5 | 46 |
| **XVN NW 32 HL** | L | PN 160 | 35 | 1,1/4" -11,5 NPT | 25,6 | 40,5 | 51,0 | 46 |
| **XVN NW 40 HL** | L | PN 160 | 42 | 1,1/2" -11,5 NPT | 26,0 | 42,0 | 53,0 | 55 |
| | | | | | | | | |
| **XVN NW 03 HS** | S | PN 630 | 6 | 1/4" -18 NPT | 15,0 | 28,0 | 35,0 | 17 |
| **XVN NW 03 HS 1/2** | S | PN 630 | 6 | 1/2" -14 NPT | 20,0 | 35,0 | 42,0 | 24 |
| **XVN NW 04 HS** | S | PN 630 | 8 | 1/4" -18 NPT | 15,0 | 28,0 | 35,0 | 17 |
| **XVN NW 04 HS 3/8** | S | PN 630 | 8 | 3/8" -18 NPT | 15,3 | 28,0 | 35,0 | 19 |
| **XVN NW 06 HS 1/4** | S | PN 630 | 10 | 1/4" -18 NPT | 15,0 | 27,5 | 35,0 | 19 |
| **XVN NW 06 HS** | S | PN 630 | 10 | 3/8" -18 NPT | 15,3 | 27,5 | 35,0 | 19 |

*Hoewel wij zeer zorgvuldig te werk gaan, kunnen wij fouten niet volledig uitsluiten en daarom niet aansprakelijkheid gesteld worden voor de vermelde gegevens.*

## Artikel

| Aanduiding | Serie | Werkdruk bar | Ø d2 (mm) | G | i (mm) | L2 (mm) | L7 (mm) | SW (mm) |
|---|---|---|---|---|---|---|---|---|
| **XVN NW 06 HS 1/2** | S | PN 630 | 10 | 1/2" -14 NPT | 20,0 | 34,5 | 42,0 | 24 |
| **XVN NW 08 HS 1/4** | S | PN 630 | 12 | 1/4" -18 NPT | 15,0 | 29,0 | 36,5 | 22 |
| **XVN NW 08 HS** | S | PN 630 | 12 | 3/8" -18 NPT | 15,3 | 29,5 | 37,0 | 22 |
| **XVN NW 08 HS 1/2** | S | PN 630 | 12 | 1/2" -14 NPT | 20,0 | 34,5 | 42,0 | 24 |
| **XVN NW 10 HS 3/8** | S | PN 630 | 14 | 3/8" -18 NPT | 15,3 | 31,5 | 39,5 | 24 |
| **XVN NW 10 HS** | S | PN 630 | 14 | 1/2" -14 NPT | 20,0 | 36,0 | 44,0 | 24 |
| **XVN NW 13 HS** | S | PN 400 | 16 | 1/2" -14 NPT | 20,0 | 35,5 | 44,0 | 27 |
| **XVN NW 13 HS 3/4** | S | PN 400 | 16 | 3/4" -14 NPT | 20,2 | 37,5 | 46,0 | 32 |
| **XVN NW 16 HS 1/2** | S | PN 400 | 20 | 1/2" -14 NPT | 20,0 | 37,5 | 48,0 | 32 |
| **XVN NW 16 HS** | S | PN 400 | 20 | 3/4" -14 NPT | 20,2 | 37,5 | 48,0 | 32 |
| **XVN NW 16 HS 1** | S | PN 400 | 20 | 1" -11,5 NPT | 25,0 | 44,5 | 55,0 | 41 |
| **XVN NW 20 HS 3/4** | S | PN 400 | 25 | 3/4" -14 NPT | 20,2 | 40,0 | 52,0 | 41 |
| **XVN NW 20 HS** | S | PN 400 | 25 | 1" -11,5 NPT | 25,0 | 45,0 | 57,0 | 41 |
| **XVN NW 20 HS 1 1/4** | S | PN 400 | 25 | 1,1/4" -11,5 NPT | 25,6 | 46,0 | 58,0 | 46 |
| **XVN NW 25 HS 1** | S | PN 400 | 30 | 1" -11,5 NPT | 25,0 | 46,0 | 59,5 | 46 |
| **XVN NW 25 HS** | S | PN 400 | 30 | 1,1/4" -11,5 NPT | 25,6 | 46,5 | 60,0 | 46 |
| **XVN NW 32 HS** | S | PN 315 | 38 | 1,1/2" -11,5 NPT | 26,0 | 49,0 | 65,0 | 55 |

Serie: LL = zeer licht  L = licht  S = zwaar – PN = nominale druk  PB = max. werkdruk – Ø d2 = buitendiameter buis

## Productvarianten

| | |
|---|---|
| **XVN VA** | Inschroefverbinding, RVS |
| **VN** | Inschroefverbinding, Staal |

*Hoewel wij zeer zorgvuldig te werk gaan, kunnen wij fouten niet volledig uitsluiten en daarom niet aansprakelijkheid gesteld worden voor de vermelde gegevens.*