# W90 HN HJ VA

Inschroefsok, bocht 90°

## Eigenschappen

| | |
|---|---|
| **Aansluiting 1** | NPT-buitendraad |
| **Afdichtingsvorm 1** | draaddichtend |
| **Aansluiting 2** | UN/UNF-buitendraad |
| **Afdichtingsvorm 2** | 74° buitenconus |
| **Constructie** | Inschroefsok |
| **Uitvoering** | Bochtstuk 90° |
| **Materiaal** | RVS |



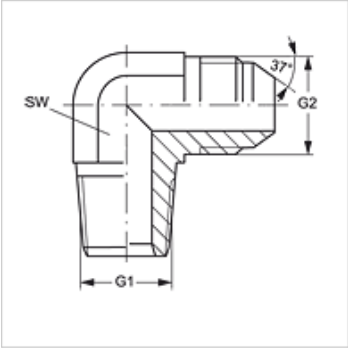


## Artikel

| Aanduiding | G1 | G2 | SW (mm) | S1 |
|---|---|---|---|---|
| **W90 HN 06 HJ 05 VA** | 3/8" -18 NPT | 1/2" -20 UNF | 19 | - |
| **W90 HN 20 HJ 24 VA** | 1,1/4" -11,5 NPT | 1,7/8" -12 UN | 48 | - |
| **W90 HN 02 HJ 04 VA** | 1/8" -27 NPT | 7/16" -20 UNF | 11 | - |
| **W90 HN 02 HJ 05 VA** | 1/8" -27 NPT | 1/2" -20 UNF | 13 | - |
| **W90 HN 02 HJ 06 VA** | 1/8" -27 NPT | 9/16" -18 UNF | 14 | - |
| **W90 HN 04 HJ VA** | 1/4" -18 NPT | 7/16" -20 UNF | 14 | - |
| **W90 HN 04 HJ 05 VA** | 1/4" -18 NPT | 1/2" -20 UNF | 14 | - |
| **W90 HN 04 HJ 06 VA** | 1/4" -18 NPT | 9/16" -18 UNF | 14 | - |
| **W90 HN 04 HJ 08 VA** | 1/4" -18 NPT | 3/4" -16 UNF | 19 | - |
| **W90 HN 06 HJ 04 VA** | 3/8" -18 NPT | 7/16" -20 UNF | 19 | - |
| **W90 HN 06 HJ VA** | 3/8" -18 NPT | 9/16" -18 UNF | 19 | - |
| **W90 HN 06 HJ 08 VA** | 3/8" -18 NPT | 3/4" -16 UNF | 19 | - |
| **W90 HN 08 HJ 16 VA** | 1/2" -14 NPT | 1,5/16" -12 UN | 33 | 24 |
| **W90 HN 06 HJ 10 VA** | 3/8" -18 NPT | 7/8" -14 UNF | 22 | - |
| **W90 HN 08 HJ VA** | 1/2" -14 NPT | 3/4" -16 UNF | 22 | - |
| **W90 HN 08 HJ 06 VA** | 1/2" -14 NPT | 9/16" -18 UNF | 22 | - |
| **W90 HN 08 HJ 10 VA** | 1/2" -14 NPT | 7/8" -14 UNF | 22 | - |
| **W90 HN 08 HJ 12 VA** | 1/2" -14 NPT | 1.1/16" -12 UN | 27 | - |
| **W90 HN 12 HJ VA** | 3/4" -14 NPT | 1.1/16" -12 UN | 27 | - |
| **W90 HN 12 HJ 10 VA** | 3/4" -14 NPT | 7/8" -14 UNF | 27 | - |
| **W90 HN 12 HJ 16 VA** | 3/4" -14 NPT | 1,5/16" -12 UN | 33 | - |
| **W90 HN 16 HJ VA** | 1" -11,5 NPT | 1,5/16" -12 UN | 33 | - |
| **W90 HN 16 HJ 12 VA** | 1" -11,5 NPT | 1.1/16" -12 UN | 33 | - |
| **W90 HN 16 HJ 20 VA** | 1" -11,5 NPT | 1,5/8" -12 UN | 41 | - |
| **W90 HN 20 HJ VA** | 1,1/4" -11,5 NPT | 1,5/8" -12 UN | 45 | - |
| **W90 HN 24 HJ VA** | 1,1/2" -11,5 NPT | 1,7/8" -12 UN | 48 | - |

SW = sleutelmaat

## Productvarianten

| | |
|---|---|
| **W90 HN HJ** | Inschroefsok, bocht 90°, Staal |

*Hoewel wij zeer zorgvuldig te werk gaan, kunnen wij fouten niet volledig uitsluiten en daarom niet aansprakelijkheid gesteld worden voor de vermelde gegevens.*