G HB
Verbindingssok

HANSA-FLEX

Eigenschappen

Aansluiting 1	BSP-buitendraad cilindrisch
Afdichtingsvorm 1	60° binnenconus Vorm A
Aansluiting 2	BSP-buitendraad cilindrisch
Afdichtingsvorm 2	60° binnenconus Vorm A
Constructie	Verbindings-sok
Uitvoering	recht
Materiaal	Staal
Oppervlakbescherming	Galvanisch gecoat



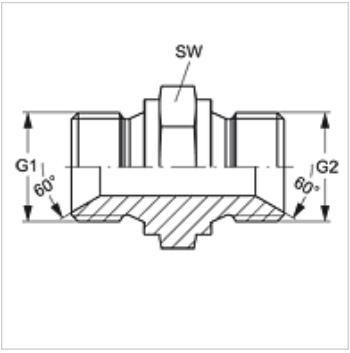

Artikel

Aanduiding	G1	G2	SW (mm)
G HB 02	G 1/8" -28	G 1/8" -28	14
G HB 02 HB 04	G 1/8" -28	G 1/4" -19	19
G HB 02 HB 06	G 1/8" -28	G 3/8" -19	22
G HB 02 HB 08	G 1/8" -28	G 1/2" -14	27
G HB 04	G 1/4" -19	G 1/4" -19	19
G HB 04 HB 06	G 1/4" -19	G 3/8" -19	22
G HB 04 HB 08	G 1/4" -19	G 1/2" -14	27
G HB 04 HB 10	G 1/4" -19	G 5/8" -14	30
G HB 04 HB 12	G 1/4" -19	G 3/4" -14	32
G HB 04 HB 16	G 1/4" -19	G 1" -11	41
G HB 04 HB 20	G 1/4" -19	G 1,1/4" -11	50
G HB 06	G 3/8" -19	G 3/8" -19	22
G HB 06 HB 08	G 3/8" -19	G 1/2" -14	27
G HB 06 HB 10	G 3/8" -19	G 5/8" -14	32
G HB 06 HB 12	G 3/8" -19	G 3/4" -14	32
G HB 06 HB 16	G 3/8" -19	G 1" -11	41
G HB 06 HB 20	G 3/8" -19	G 1,1/4" -11	50
G HB 08	G 1/2" -14	G 1/2" -14	27
G HB 08 HB 10	G 1/2" -14	G 5/8" -14	30
G HB 08 HB 12	G 1/2" -14	G 3/4" -14	32
G HB 08 HB 16	G 1/2" -14	G 1" -11	41
G HB 08 HB 20	G 1/2" -14	G 1,1/4" -11	50
G HB 08 HB 24	G 1/2" -14	G 1,1/2" -11	55
G HB 08 HB 32	G 1/2" -14	G 2" -11	70
G HB 10	G 5/8" -14	G 5/8" -14	30
G HB 10 HB 12	G 5/8" -14	G 3/4" -14	32
G HB 10 HB 16	G 5/8" -14	G 1" -11	41
G HB 10 HB 20	G 5/8" -14	G 1,1/4" -11	50
G HB 12	G 3/4" -14	G 3/4" -14	32
G HB 12 HB 16	G 3/4" -14	G 1" -11	41
G HB 12 HB 20	G 3/4" -14	G 1,1/4" -11	50
G HB 12 HB 24	G 3/4" -14	G 1,1/2" -11	55
G HB 12 HB 32	G 3/4" -14	G 2" -11	70
G HB 16	G 1" -11	G 1" -11	41
G HB 16 HB 20	G 1"	G 1,1/4" -11	50
G HB 16 HB 24	G 1" -11	G 1,1/2" -11	55
G HB 16 HB 32	G 1" -11	G 2" -11	70
G HB 20	G 1,1/4" -11	G 1,1/4" -11	50
G HB 20 HB 24	G 1,1/4" -11	G 1,1/2" -11	55
G HB 20 HB 32	G 1,1/4" -11	G 2" -11	70
G HB 24	G 1,1/2" -11	G 1,1/2" -11	55
G HB 24 HB 32	G 1,1/2" -11	G 2" -11	70
G HB 32	G 2" -11	G 2" -11	70
G HB 40 HB 48	G 2,1/2" -11	G 3" -11	100
G HB 48	G 3" -11	G 3" -11	110

SW = sleutelmaat

Productvarianten

G HB VA	Verbindingssok, RVS

Hoewel wij zeer zorgvuldig te werk gaan, kunnen wij fouten niet volledig uitsluiten en daarom niet aansprakelijkheid gesteld worden voor de vermelde gegevens.