G HB VA
Verbindingssok

Eigenschappen

Aansluiting 1	BSP-buitendraad cilindrisch
Afdichtingsvorm 1	60° binnenconus
Aansluiting 2	BSP-buitendraad cilindrisch
Afdichtingsvorm 2	60° binnenconus
Constructie	Verbindings-sok
Uitvoering	recht
Materiaal	RVS



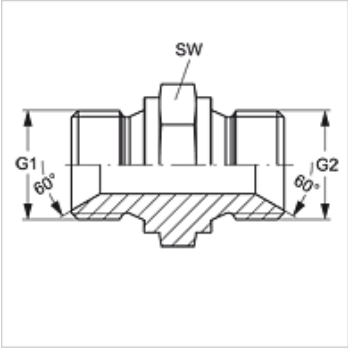

Artikel

Aanduiding	G1	G2	SW (mm)
G HB 02 VA	G 1/8" -28	G 1/8" -28	14
G HB 02 HB 04 VA	G 1/8" -28	G 1/4" -19	19
G HB 02 HB 06 VA	G 1/8" -28	G 3/8" -19	22
G HB 04 VA	G 1/4" -19	G 1/4" -19	19
G HB 04 HB 06 VA	G 1/4" -19	G 3/8" -19	22
G HB 04 HB 08 VA	G 1/4" -19	G 1/2" -14	27
G HB 04 HB 12 VA	G 1/4" -19	G 3/4" -14	32
G HB 06 VA	G 3/8" -19	G 3/8" -19	22
G HB 06 HB 08 VA	G 3/8" -19	G 1/2" -14	27
G HB 06 HB 10 VA	G 3/8" -19	G 5/8" -14	32
G HB 06 HB 12 VA	G 3/8" -19	G 3/4" -14	32
G HB 06 HB 16 VA	G 3/8" -19	G 1" -11	41
G HB 08 VA	G 1/2" -14	G 1/2" -14	27
G HB 08 HB 10 VA	G 1/2" -14	G 5/8" -14	30
G HB 08 HB 12 VA	G 1/2" -14	G 3/4" -14	32
G HB 08 HB 16 VA	G 1/2" -14	G 1" -11	41
G HB 08 HB 20 VA	G 1/2" -14	G 1,1/4" -11	50
G HB 10 VA	G 5/8" -14	G 5/8" -14	30
G HB 10 HB 12 VA	G 5/8" -14	G 3/4" -14	32
G HB 12 VA	G 3/4" -14	G 3/4" -14	32
G HB 12 HB 16 VA	G 3/4" -14	G 1" -11	41
G HB 12 HB 20 VA	G 3/4" -14	G 1,1/4" -11	50
G HB 12 HB 24 VA	G 3/4" -14	G 1,1/2" -11	55
G HB 16 VA	G 1" -11	G 1" -11	41
G HB 16 HB 20 VA	G 1"	G 1,1/4" -11	50
G HB 16 HB 24 VA	G 1" -11	G 1,1/2" -11	55
G HB 16 HB 32 VA	G 1" -11	G 2" -11	70
G HB 20 VA	G 1,1/4" -11	G 1,1/4" -11	50
G HB 20 HB 24 VA	G 1,1/4" -11	G 1,1/2" -11	55
G HB 20 HB 32 VA	G 1,1/4" -11	G 2" -11	70
G HB 24 VA	G 1,1/2" -11	G 1,1/2" -11	55
G HB 24 HB 32 VA	G 1,1/2" -11	G 2" -11	70
G HB 32 VA	G 2" -11	G 2" -11	70

SW = sleutelmaat

Productvarianten

G HB	Verbindingssok, Staal

Hoewel wij zeer zorgvuldig te werk gaan, kunnen wij fouten niet volledig uitsluiten en daarom niet aansprakelijkheid gesteld worden voor de vermelde gegevens.