# GE HRO HB
Inschroefsok

HANSA-FLEX

## Eigenschappen

| | |
|---|---|
| **Aansluiting 1** | BSP-buitendraad cilindrisch |
| **Afdichtingsvorm 1** | vorm G |
| **Aansluiting 2** | BSP-buitendraad cilindrisch |
| **Afdichtingsvorm 2** | 60° binnenconus |
| **Constructie** | Inschroefsok |
| **Uitvoering** | recht |
| **Materiaal** | Staal |
| **Oppervlakbescherming** | Galvanisch gecoat |



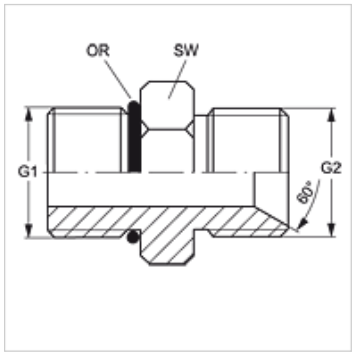


## Artikel

| Aanduiding | G1 | G2 | SW (mm) | OR |
|---|---|---|---|---|
| **GE HRO 02 HB** | G 1/8" -28 | G 1/8" -28 | 20 | 7,65 x 1,78 |
| **GE HRO 04 HB 02** | G 1/4" -19 | G 1/8" -28 | 20 | 10,78 x 2,62 |
| **GE HRO 04 HB** | G 1/4" -19 | G 1/4" -19 | 20 | 10,78 x 2,62 |
| **GE HRO 04 HB 06** | G 1/4" -19 | G 3/8" -19 | 24 | 10,78 x 2,62 |
| **GE HRO 06 HB 04** | G 3/8" -19 | G 1/4" -19 | 24 | 13,94 x 2,62 |
| **GE HRO 06 HB** | G 3/8" -19 | G 3/8" -19 | 24 | 13,94 x 2,62 |
| **GE HRO 06 HB 08** | G 3/8" -19 | G 1/2" -14 | 29 | 13,94 x 2,62 |
| **GE HRO 08 HB 06** | G 1/2" -14 | G 3/8" -19 | 29 | 17,86 x 2,62 |
| **GE HRO 08 HB** | G 1/2" -14 | G 1/2" -14 | 28 | 17,86 x 2,62 |
| **GE HRO 08 HB 10** | G 1/2" -14 | G 5/8" -14 | 29 | 17,86 x 2,62 |
| **GE HRO 08 HB 12** | G 1/2" -14 | G 3/4" -14 | 29 | 17,86 x 2,62 |
| **GE HRO 12 HB 08** | G 3/4" -14 | G 1/2" -14 | 35 | 23,47 x 2,62 |
| **GE HRO 12 HB** | G 3/4" -14 | G 3/4" -14 | 35 | 23,47 x 2,62 |
| **GE HRO 12 HB 16** | G 3/4" -14 | G 1" -11 | 43 | 23,47 x 2,62 |
| **GE HRO 16 HB 12** | G 1" -11 | G 3/4" -14 | 43 | 29,74 x 3,53 |
| **GE HRO 16 HB** | G 1" -11 | G 1" -11 | 43 | 29,74 x 3,53 |
| **GE HRO 20 HB 16** | G 1,1/4" -11 | G 1" -11 | 53 | 37,69 x 3,53 |
| **GE HRO 20 HB** | G 1,1/4" -11 | G 1,1/4" -11 | 53 | 37,69 x 3,53 |
| **GE HRO 24 HB** | G 1,1/2" -11 | G 1,1/2" -11 | 58 | 44,04 x 3,53 |

SW = sleutelmaat

*Hoewel wij zeer zorgvuldig te werk gaan, kunnen wij fouten niet volledig uitsluiten en daarom niet aansprakelijkheid gesteld worden voor de vermelde gegevens.*