K-FI REGL METALLBEHAE S MANO VARIOB

Filter regulators with metal bowl, incl. sight glass and pressure gauge

Eigenschappen

Ingangsdruk	Max. 16 bar (polycarbonate bowl), Max. 20 bar (metal bowl)
Mediumtemperatuur	max. 50 °C
Omgevingstemperatuur	Max. 50 °C (polycarbonate bowl), Max. 80 ° C (metal bowl)
Poriënwijdte in het filterelement	40 µm
Afdichtmateriaal	NBR
Veerkap	POM
Behuizing	Die-cast zinc
Membranen	NBR
Drain valve	Manual
Debietwaardemeting	At P1 = 10 bar, P2 = 6 bar and pressure drop Δp = 1 bar



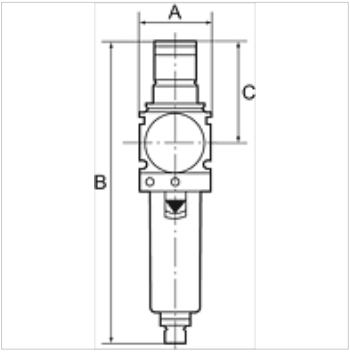

Aanwijzing

Andere gegevens op aanvraag.

Beschrijving

Reversible diaphragm pressure regulators, independent of inlet pressure, with self-relieving design, combined with a centrifugal separator. The pressure setting can be locked by pushing the knob down. Approved series in modern industrial design, with the following key benefits: Simple handling, Convenient modular assembly thanks to innovative fasteners, Excellent flow values.

Bestelaanwijzingen

Filter regulators are also available with bowl guard or metal bowl. Filter regulators are also available in lockable version. Please ask for more information.

Extra informatie

Filter regulators are also available with bowl guard or metal bowl. Filter regulators are also available in lockable version. Please ask for more information.

Artikel

Aanduiding	Schroefdraad	Regelbereik	Debiet (L/min)	A (mm)	B	C (mm)
K- 07 25 06 86	G 1/4	0.5 - 10 bar	2000	48,0	203,0 mm	68,0
K- 07 25 06 88	G 3/8	0.5 - 10 bar	3000	48,0	203,0 mm	68,0
K- 07 25 06 90	G 1/2	0.5 - 10 bar	5500	70,0	273,0 mm	98,0
K- 07 25 06 92	G 3/4	0.5 - 10 bar	6500	70,0	273,0 mm	98,0
K- 07 25 06 94	G 1	0.5 - 10 bar	6500	124,0	273,0 mm	98,0

Reserveonderdelen

K-VERSCHLEI-SATZ VARIOBLOC	Set of wearing parts
K-ERSATZBEHAELTER VARIOBLOC POLY	Spare tank Polycarbonat
K-FILTERELEMENT VARIOBLOC	Filter element
K-ABLASSVENTIL AUTO	Fully-automatic drain valve with Adapter G 1/8

Hoewel wij zeer zorgvuldig te werk gaan, kunnen wij fouten niet volledig uitsluiten en daarom niet aansprakelijkheid gesteld worden voor de vermelde gegevens.