K-BKR KL SERIE 375

Ball valves, 375 series

Eigenschappen

Werkdruk	max. 70 bar (depending on temperature and nominal size)
Richtwaarden	G 1/4 to G 1: 20 °C: 70 bar, 60 °C: 65 bar, 100 °C: 45 bar, 150 °C: 7 bar, 180 °C: 4 bar, 200 °C: 0 bar G 1 1/4 to G 1 1/2: 20 °C: 70 bar, 60 °C: 55 bar, 100 °C: 35 bar, 150 °C: 7 bar, 180 °C: 4 bar, 200 °C: 0 bar G 2: 20 °C: 60 bar, 60 °C: 40 bar, 10
Bedrijfstemperatuur	200 °C at 0 bar
Afdichting	15 % RPTFE (glass fibre reinforced PTFE)
Handhendel	Stainless steel 1.4301

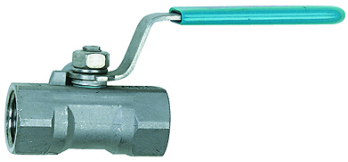

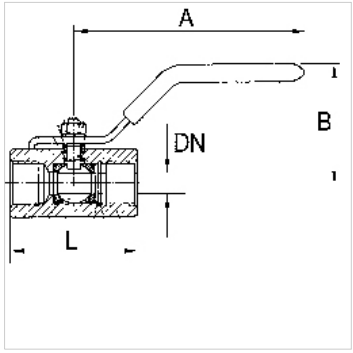

Aanwijzing

G thread acc. to DIN EN ISO 228-1, with ISO flange plate (acc. to ISO 5211)
Andere gegevens op aanvraag.

Bestelaanwijzingen

For use on devices that have to be vented whenever they are turned off, either because of safety regulations or for technical reasons. The pneumatic devices are disconnected from the system and simultaneously vented each time they are shut off.

Extra informatie

G thread acc. DIN EN ISO 228-1

Artikel

Aanduiding	DN	Schroefdraad	A (mm)	B (mm)	L (mm)	Materiaal
K- 07 30 15 36	5	G 1/4	69,0	34,0	39,0	Stainless steel 1.4401/1.4408
K- 07 30 15 37	7	G 3/8	83,0	38,0	44,0	Stainless steel 1.4401/1.4408
K- 07 30 15 38	10	G 1/2	96,0	41,0	59,0	Stainless steel 1.4401/1.4408
K- 07 30 15 39	13	G 3/4	96,0	45,0	60,0	Stainless steel 1.4401/1.4408
K- 07 30 29 80	16	G 1	116,0	52,0	72,0	Stainless steel 1.4401/1.4408
K- 07 30 29 81	20	G 1 1/4	116,0	57,0	77,0	Stainless steel 1.4401/1.4408
K- 07 30 29 82	25	G 1 1/2	158,0	62,0	84,0	Stainless steel 1.4401/1.4408
K- 07 30 29 83	32	G 2	158,0	68,0	100,0	Stainless steel 1.4401/1.4408

Hoewel wij zeer zorgvuldig te werk gaan, kunnen wij fouten niet volledig uitsluiten en daarom niet aansprakelijkheid gesteld worden voor de vermelde gegevens.