# V-LL / V-HL / V-HS

Złączka

HANSA-FLEX

## Właściwości

| | |
|---|---|
| **Przyłącze 1** | metryczny gwint zewnętrzny cylindryczny |
| **Rodzaj uszczelnienia 1** | stożek wewnętrzny 24° |
| **Przyłącze 2** | metryczny gwint zewnętrzny cylindryczny |
| **Rodzaj uszczelnienia 2** | stożek wewnętrzny 24° |
| **Typ konstrukcji** | złączka |
| **Kształt** | prosty |
| **Norma** | ISO 8434-1 |
| **Zakres dostawy** | króciec z nakrętką kołpakową i pierścieniem zacinającym |
| **Materiał** | stal |
| **Ochrona powierzchni** | galwanizowany |



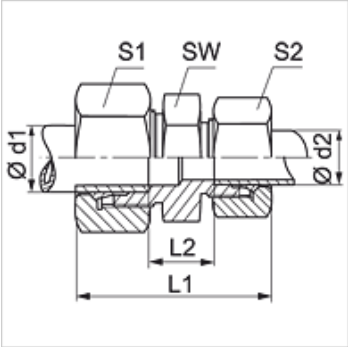


## Wskazówka

Wskazówki do montażu, zabudowy, obciążalności ciśnieniowej i dopuszczalnych temperatur roboczych są zawarte w Informacjach Technicznych dwuzłączek rurowych.

## Artykuł

| Oznaczenie | Typoszereg | Ciśnienie robocze bar | Ø d1 (mm) | Ø d2 (mm) | L1 (mm) | L2 (mm) | SW (mm) | S1 | S2 |
|---|---|---|---|---|---|---|---|---|---|
| **V 04 LL** | LL | PN 100 | 4 | 4 | 31,0 | 12,0 | 9 | 10 | 10 |
| **V 05 LL** | LL | PN 100 | 5 | 5 | 32,0 | 9,0 | 11 | 12 | 12 |
| **V 06 LL 04** | LL | PN 100 | 6 | 4 | 32,0 | 10,5 | 11 | 12 | 10 |
| **V 06 LL** | LL | PN 100 | 6 | 6 | 32,0 | 9,0 | 11 | 12 | 12 |
| **V 08 LL 04** | LL | PN 100 | 8 | 4 | 34,0 | 12,5 | 12 | 14 | 10 |
| **V 08 LL 06** | LL | PN 100 | 8 | 6 | 34,0 | 11,0 | 12 | 14 | 12 |
| **V 08 LL** | LL | PN 100 | 8 | 8 | 35,0 | 12,0 | 12 | 14 | 14 |
| **V 10 LL** | LL | PN 100 | 10 | 10 | 35,0 | 12,0 | 14 | 17 | 17 |
| **V 12 LL** | LL | PN 100 | 12 | 12 | 35,0 | 11,0 | 17 | 19 | 19 |
| **V 16 LL** | LL | PN 100 | 16 | 16 | 54,5 | 20,0 | 27 | 27 | 27 |
| | | | | | | | | | |
| **V NW 04 HL** | L | PN 315 | 6 | 6 | 39,0 | 10,0 | 12 | 14 | 14 |
| **V NW 06 HL 04** | L | PN 315 | 8 | 6 | 41,0 | 11,0 | 14 | 14 | 14 |
| **V NW 06 HL** | L | PN 315 | 8 | 8 | 40,0 | 11,0 | 14 | 17 | 17 |
| **V NW 08 HL 04** | L | PN 315 | 10 | 6 | 42,0 | 12,0 | 17 | 19 | 14 |
| **V NW 08 HL 06** | L | PN 315 | 10 | 8 | 42,0 | 12,0 | 17 | 19 | 17 |
| **V NW 08 HL** | L | PN 315 | 10 | 10 | 42,0 | 13,0 | 17 | 19 | 19 |
| **V NW 10 HL 04** | L | PN 315 | 12 | 6 | 42,0 | 13,0 | 19 | 22 | 14 |
| **V NW 10 HL 06** | L | PN 315 | 12 | 8 | 42,0 | 13,0 | 19 | 22 | 17 |
| **V NW 10 HL 08** | L | PN 315 | 12 | 10 | 44,0 | 14,0 | 19 | 22 | 19 |
| **V NW 10 HL** | L | PN 315 | 12 | 12 | 43,0 | 14,0 | 19 | 22 | 22 |
| **V NW 13 HL 04** | L | PN 315 | 15 | 6 | 43,5 | 14,0 | 24 | 27 | 14 |
| **V NW 13 HL 06** | L | PN 315 | 15 | 8 | 43,5 | 14,0 | 24 | 27 | 17 |
| **V NW 13 HL 08** | L | PN 315 | 15 | 10 | 45,0 | 15,0 | 24 | 27 | 19 |
| **V NW 13 HL 10** | L | PN 315 | 15 | 12 | 45,0 | 15,0 | 24 | 27 | 22 |
| **V NW 13 HL** | L | PN 315 | 15 | 15 | 46,0 | 16,0 | 24 | 27 | 27 |
| **V NW 16 HL 04** | L | PN 315 | 18 | 6 | 45,0 | 15,0 | 27 | 32 | 14 |
| **V NW 16 HL 06** | L | PN 315 | 18 | 8 | 45,0 | 15,0 | 27 | 32 | 17 |
| **V NW 16 HL 08** | L | PN 315 | 18 | 10 | 46,0 | 15,5 | 27 | 32 | 19 |
| **V NW 16 HL 10** | L | PN 315 | 18 | 12 | 47,0 | 15,5 | 27 | 32 | 22 |
| **V NW 16 HL 10 27** | L | PN 315 | 18 | 12 | 46,0 | 15,5 | 27 | 32 | 32 |
| **V NW 16 HL 13** | L | PN 315 | 18 | 15 | 48,0 | 16,5 | 27 | 32 | 27 |
| **V NW 16 HL** | L | PN 315 | 18 | 18 | 48,0 | 16,0 | 27 | 32 | 32 |
| **V NW 16 HL 27** | L | PN 315 | 18 | 18 | 48,0 | 16,0 | 27 | 32 | 32 |
| **V NW 20 HL 06** | L | PN 160 | 22 | 8 | 48,0 | 17,0 | 32 | 36 | 17 |
| **V NW 20 HL 08** | L | PN 160 | 22 | 10 | 48,0 | 17,0 | 32 | 36 | 19 |
| **V NW 20 HL 10** | L | PN 160 | 22 | 12 | 48,0 | 17,5 | 32 | 36 | 22 |
| **V NW 20 HL 13** | L | PN 160 | 22 | 15 | 50,0 | 18,5 | 32 | 36 | 27 |
| **V NW 20 HL 16** | L | PN 160 | 22 | 18 | 51,0 | 18,0 | 32 | 36 | 32 |
| **V NW 20 HL 16 27** | L | PN 160 | 22 | 18 | 50,0 | 18,0 | 32 | 36 | 36 |
| **V NW 20 HL** | L | PN 160 | 22 | 22 | 52,0 | 20,0 | 32 | 36 | 36 |
| **V NW 25 HL 06** | L | PN 160 | 28 | 8 | 49,5 | 18,5 | 41 | 41 | 17 |

*Mimo starannego sprawdzenia nie możemy wykluczyć błędów i nie gwarantujemy prawidłowości podanych informacji.*

## Artykuł

| Oznaczenie | Typoszereg | Ciśnienie robocze bar | Ø d1 (mm) | Ø d2 (mm) | L1 (mm) | L2 (mm) | SW (mm) | S1 | S2 |
|---|---|---|---|---|---|---|---|---|---|
| **V NW 25 HL 08** | L | PN 160 | 28 | 10 | 49,5 | 18,5 | 41 | 41 | 19 |
| **V NW 25 HL 10** | L | PN 160 | 28 | 12 | 51,0 | 19,0 | 41 | 41 | 22 |
| **V NW 25 HL 13** | L | PN 160 | 28 | 15 | 51,0 | 19,5 | 41 | 41 | 27 |
| **V NW 25 HL 16** | L | PN 160 | 28 | 18 | 52,0 | 19,0 | 41 | 41 | 32 |
| **V NW 25 HL 20** | L | PN 160 | 28 | 22 | 54,0 | 21,0 | 41 | 41 | 36 |
| **V NW 25 HL** | L | PN 160 | 28 | 28 | 54,0 | 21,0 | 41 | 41 | 41 |
| **V NW 32 HL 20** | L | PN 160 | 35 | 22 | 59,0 | 21,0 | 46 | 50 | 36 |
| **V NW 32 HL 25** | L | PN 160 | 35 | 28 | 59,0 | 21,0 | 46 | 50 | 41 |
| **V NW 32 HL** | L | PN 160 | 35 | 35 | 63,0 | 20,0 | 46 | 50 | 50 |
| **V NW 40 HL 25** | L | PN 160 | 42 | 28 | 62,0 | 22,5 | 65 | 60 | 41 |
| **V NW 40 HL 32** | L | PN 160 | 42 | 35 | 66,0 | 21,5 | 55 | 60 | 50 |
| **V NW 40 HL** | L | PN 160 | 42 | 42 | 66,0 | 21,0 | 55 | 60 | 60 |
| | | | | | | | | | |
| **V NW 16 HL 13 HS** | L / S | PN 315 | 18 | 16 | 48,0 | 17,0 | 27 | 32 | 30 |
| | | | | | | | | | |
| **V NW 03 HS** | S | PN 630 | 6 | 6 | 45,0 | 16,0 | 14 | 17 | 17 |
| **V NW 04 HS 03** | S | PN 630 | 8 | 6 | 48,0 | 18,0 | 17 | 19 | 17 |
| **V NW 04 HS** | S | PN 630 | 8 | 8 | 47,0 | 18,0 | 17 | 19 | 19 |
| **V NW 06 HS 03** | S | PN 630 | 10 | 6 | 49,0 | 17,5 | 19 | 22 | 17 |
| **V NW 06 HS 04** | S | PN 630 | 10 | 8 | 49,0 | 17,5 | 19 | 22 | 19 |
| **V NW 06 HS** | S | PN 630 | 10 | 10 | 49,0 | 17,0 | 19 | 22 | 22 |
| **V NW 08 HS 03** | S | PN 630 | 12 | 6 | 51,0 | 19,5 | 22 | 24 | 17 |
| **V NW 08 HS 04** | S | PN 630 | 12 | 8 | 51,0 | 19,5 | 22 | 24 | 19 |
| **V NW 08 HS 06** | S | PN 630 | 12 | 10 | 52,0 | 19,0 | 22 | 24 | 22 |
| **V NW 08 HS** | S | PN 630 | 12 | 12 | 51,0 | 19,0 | 22 | 24 | 24 |
| **V NW 10 HS 03** | S | PN 630 | 14 | 6 | 53,0 | 20,0 | 24 | 27 | 17 |
| **V NW 10 HS 04** | S | PN 630 | 14 | 8 | 54,0 | 20,0 | 24 | 27 | 19 |
| **V NW 10 HS 06** | S | PN 630 | 14 | 10 | 55,0 | 20,5 | 24 | 27 | 22 |
| **V NW 10 HS 08** | S | PN 630 | 14 | 12 | 55,0 | 20,5 | 24 | 27 | 24 |
| **V NW 10 HS** | S | PN 630 | 14 | 14 | 57,0 | 22,0 | 24 | 27 | 27 |
| **V NW 13 HS 03** | S | PN 400 | 16 | 6 | 53,0 | 20,0 | 27 | 30 | 17 |
| **V NW 13 HS 04** | S | PN 400 | 16 | 8 | 54,0 | 20,0 | 27 | 30 | 19 |
| **V NW 13 HS 06** | S | PN 400 | 16 | 10 | 54,0 | 20,0 | 27 | 30 | 22 |
| **V NW 13 HS 08** | S | PN 400 | 16 | 12 | 55,0 | 20,0 | 27 | 30 | 24 |
| **V NW 13 HS 10** | S | PN 400 | 16 | 14 | 58,0 | 21,5 | 27 | 30 | 27 |
| **V NW 13 HS** | S | PN 400 | 16 | 16 | 57,0 | 21,0 | 27 | 30 | 30 |
| **V NW 16 HS 06** | S | PN 400 | 20 | 10 | 59,5 | 22,0 | 32 | 36 | 22 |
| **V NW 16 HS 08** | S | PN 400 | 20 | 12 | 59,5 | 22,0 | 32 | 36 | 24 |
| **V NW 16 HS 10** | S | PN 400 | 20 | 14 | 63,0 | 23,5 | 32 | 36 | 27 |
| **V NW 16 HS 13** | S | PN 400 | 20 | 16 | 63,0 | 23,0 | 32 | 36 | 30 |
| **V NW 16 HS** | S | PN 400 | 20 | 20 | 66,0 | 23,0 | 32 | 38 | 38 |
| **V NW 20 HS 13** | S | PN 400 | 25 | 16 | 68,0 | 25,5 | 41 | 46 | 30 |
| **V NW 20 HS 16** | S | PN 400 | 25 | 20 | 71,0 | 25,5 | 41 | 46 | 36 |
| **V NW 20 HS** | S | PN 400 | 25 | 25 | 74,0 | 26,0 | 41 | 46 | 16 |
| **V NW 25 HS 13** | S | PN 400 | 30 | 16 | 70,0 | 25,0 | 46 | 50 | 30 |
| **V NW 25 HS 16** | S | PN 400 | 30 | 20 | 74,0 | 26,0 | 46 | 50 | 36 |
| **V NW 25 HS 20** | S | PN 400 | 30 | 25 | 77,0 | 26,5 | 46 | 50 | 46 |
| **V NW 25 HS** | S | PN 400 | 30 | 30 | 80,0 | 27,0 | 46 | 50 | 50 |
| **V NW 32 HS** | S | PN 315 | 38 | 38 | 90,0 | 29,0 | 55 | 60 | 60 |
| **V NW 32 HS 13** | S | PN 315 | 38 | 16 | 81,0 | 29,0 | 55 | 60 | 30 |
| **V NW 32 HS 20** | S | PN 315 | 38 | 25 | 84,0 | 29,0 | 55 | 60 | 46 |
| **V NW 32 HS 25** | S | PN 315 | 38 | 30 | 87,0 | 29,5 | 55 | 60 | 50 |
| | | | | | | | | | |
| **V NW 13 HS 13 HL** | S / L | PN 400 | 16 | 15 | 60,0 | 22,0 | 27 | 30 | 27 |
| **V NW 16 HS 13 HL** | S / L | PN 400 | 20 | 15 | 62,0 | 24,0 | 32 | 36 | 27 |
| **V NW 16 HS 16 HL** | S / L | PN 400 | 20 | 18 | 62,0 | 24,0 | 32 | 36 | 32 |
| **V NW 20 HS 20 HL** | S / L | PN 400 | 25 | 22 | 70,0 | 25,0 | 41 | 46 | 36 |

typoszereg: LL = bardzo lekki L = lekki S = ciężki – PN = ciśnienie znamionowe PB = maks. ciśnienie robocze – Ø d1 = średnica zewnętrzna rury – Ø d2 = średnica zewnętrzna rury

## Warianty produktu

| | |
|---|---|
| **V-LL MG / V-HL MG / V-HS MG** | Dwuzłączka, mosiądz |

*Mimo starannego sprawdzenia nie możemy wykluczyć błędów i nie gwarantujemy prawidłowości podanych informacji.*