# G AB HB
Łączniki

HANSA-FLEX

## Właściwości

| | |
|---|---|
| **Przyłącze 1** | gwint wewnętrzny BSP |
| **Rodzaj uszczelnienia 1** | stożek zewnętrzny 60° |
| **Przyłącze 2** | gwint zewnętrzny BSP cylindryczny |
| **Rodzaj uszczelnienia 2** | stożek wewnętrzny 60° |
| **Typ konstrukcji** | Łączniki |
| **Kształt** | prosty |
| **Materiał** | stal |
| **Ochrona powierzchni** | galwanizowany |



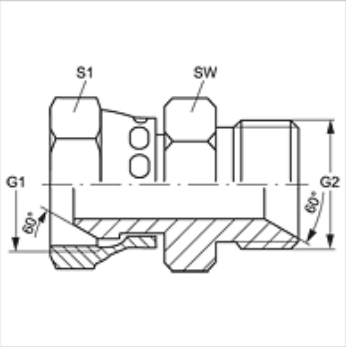


## Artykuł

| Oznaczenie | G1 | G2 | SW (mm) | S1 |
|---|---|---|---|---|
| **G AB 02 HB** | G 1/8" -28 | G 1/8" -28 | 14 | 14 |
| **G AB 02 HB 04** | G 1/8" -28 | G 1/4" -19 | 19 | 14 |
| **G AB 04 HB 02** | G 1/4" -19 | G 1/8" -28 | 14 | 19 |
| **G AB 04 HB** | G 1/4" -19 | G 1/4" -19 | 19 | 19 |
| **G AB 04 HB 06** | G 1/4" -19 | G 3/8" -19 | 22 | 19 |
| **G AB 04 HB 08** | G 1/4" -19 | G 1/2" -14 | 27 | 19 |
| **G AB 06 HB 04** | G 3/8" -19 | G 1/4" -19 | 19 | 22 |
| **G AB 06 HB** | G 3/8" -19 | G 3/8" -19 | 22 | 22 |
| **G AB 06 HB 08** | G 3/8" -19 | G 1/2" -14 | 27 | 22 |
| **G AB 06 HB 12** | G 3/8" -19 | G 3/4" -14 | 32 | 22 |
| **G AB 08 HB 04** | G 1/2" -14 | G 1/4" -19 | 19 | 27 |
| **G AB 08 HB 06** | G 1/2" -14 | G 3/8" -19 | 22 | 27 |
| **G AB 08 HB** | G 1/2" -14 | G 1/2" -14 | 27 | 27 |
| **G AB 08 HB 10** | G 1/2" -14 | G 5/8" -14 | 30 | 27 |
| **G AB 08 HB 12** | G 1/2" -14 | G 3/4" -14 | 32 | 27 |
| **G AB 08 HB 16** | G 1/2" -14 | G 1" -11 | 41 | 27 |
| **G AB 10 HB 06** | G 5/8" -14 | G 3/8" -19 | 30 | 30 |
| **G AB 10 HB 08** | G 5/8" -14 | G 1/2" -14 | 27 | 30 |
| **G AB 10 HB** | G 5/8" -14 | G 5/8" -14 | 30 | 30 |
| **G AB 10 HB 12** | G 5/8" -14 | G 3/4" -14 | 32 | 30 |
| **G AB 10 HB 16** | G 5/8" -14 | G 1" -11 | 41 | 30 |
| **G AB 12 HB 06** | G 3/4" -14 | G 3/8" -19 | 27 | 32 |
| **G AB 12 HB 08** | G 3/4" -14 | G 1/2" -14 | 27 | 32 |
| **G AB 12 HB 10** | G 3/4" -14 | G 5/8" -14 | 30 | 32 |
| **G AB 12 HB** | G 3/4" -14 | G 3/4" -14 | 32 | 32 |
| **G AB 12 HB 16** | G 3/4" -14 | G 1" -11 | 41 | 32 |
| **G AB 12 HB 20** | G 3/4" -14 | G 1.1/4" -11 | 50 | 32 |
| **G AB 16 HB 08** | G 1" -11 | G 1/2" -14 | 32 | 41 |
| **G AB 16 HB 10** | G 1" -11 | G 5/8" -14 | 32 | 41 |
| **G AB 16 HB 12** | G 1" -11 | G 3/4" -14 | 32 | 41 |
| **G AB 16 HB** | G 1" -11 | G 1" -11 | 41 | 41 |
| **G AB 16 HB 20** | G 1" -11 | G 1.1/4" -11 | 50 | 41 |
| **G AB 20 HB 12** | G 1.1/4" -11 | G 3/4" -14 | 41 | 50 |
| **G AB 20 HB 16** | G 1.1/4" -11 | G 1" -11 | 41 | 50 |
| **G AB 20 HB** | G 1.1/4" -11 | G 1.1/4" -11 | 50 | 50 |
| **G AB 20 HB 24** | G 1.1/4" -11 | G 1.1/2" -11 | 55 | 50 |
| **G AB 24 HB 20** | G 1.1/2" -11 | G 1.1/4" -11 | 50 | 55 |
| **G AB 24 HB** | G 1.1/2" -11 | G 1.1/2" -11 | 55 | 55 |
| **G AB 24 HB 32** | G 1.1/2" -11 | G 2" -11 | 70 | 55 |
| **G AB 32 HB 24** | G 2" -11 | G 1.1/2" -11 | 60 | 70 |
| **G AB 32 HB** | G 2" -11 | G 2" -11 | 70 | 70 |

SW, S1, S2 = rozwartość klucza (RK)

## Warianty produktu

| | |
|---|---|
| **G AB HB VA** | Łączniki, stal szlachetna |

*Mimo starannego sprawdzenia nie możemy wykluczyć błędów i nie gwarantujemy prawidłowości podanych informacji.*