K-BKR EINTEILIG VA

Ball valves

Właściwości

Ciśnienie robocze	max. 55 bar (depending on connection size and temperature)
Temperatura robocza	Max. 150 °C
uszczelka	PTFE
dźwignia ręczna	Stainless steel 1.4301

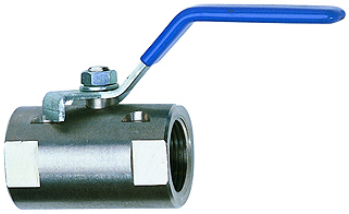

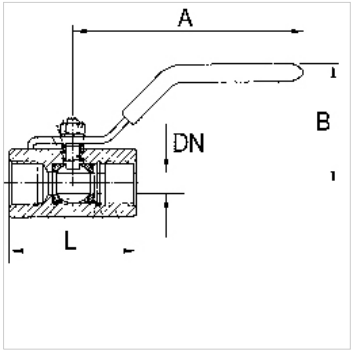

Wskazówka

G thread acc. to DIN EN ISO 228-1, with ISO flange plate (acc. to ISO 5211)
Dalsze informacje na zapytanie.

Opis

Full bore with G 1/4 to G 3/8, reduced bore with G 1/2 to G 2

Wskazówki do zamówienia

For use on devices that have to be vented whenever they are turned off, either because of safety regulations or for technical reasons. The pneumatic devices are disconnected from the system and simultaneously vented each time they are shut off.

Artykuł

Oznaczenie	DN	Gwint	A (mm)	B (mm)	L (mm)	Materiał
K- 07 30 14 94	5	G 1/4	60,0	30,0	39,8	Stainless steel 1.4401/1.4408
K- 07 30 14 95	7	G 3/8	80,0	33,0	44,8	Stainless steel 1.4401/1.4408
K- 07 30 14 96	9	G 1/2	110,0	57,0	56,5	Stainless steel 1.4401/1.4408
K- 07 30 14 97	13	G 3/4	110,0	61,0	60,0	Stainless steel 1.4401/1.4408
K- 07 30 14 98	15	G 1	124,0	70,0	70,0	Stainless steel 1.4401/1.4408
K- 07 30 14 99	20	G 1 1/4	152,0	75,0	77,6	Stainless steel 1.4401/1.4408
K- 07 30 15 00	25	G 1 1/2	150,0	80,0	87,0	Stainless steel 1.4401/1.4408
K- 07 30 15 01	32	G 2	155,0	85,0	102,0	Stainless steel 1.4401/1.4408

Mimo starannego sprawdzenia nie możemy wykluczyć błędów i nie gwarantujemy prawidłowości podanych informacji.