K-BKR KL SERIE 375

Ball valves, 375 series

Właściwości

Ciśnienie robocze	max. 70 bar (depending on temperature and nominal size)
wartości orientacyjne	G 1/4 to G 1: 20 °C: 70 bar, 60 °C: 65 bar, 100 °C: 45 bar, 150 °C: 7 bar, 180 °C: 4 bar, 200 °C: 0 bar G 1 1/4 to G 1 1/2: 20 °C: 70 bar, 60 °C: 55 bar, 100 °C: 35 bar, 150 °C: 7 bar, 180 °C: 4 bar, 200 °C: 0 bar G 2: 20 °C: 60 bar, 60 °C: 40 bar, 10
Temperatura robocza	200 °C at 0 bar
uszczelka	15 % RPTFE (glass fibre reinforced PTFE)
dźwignia ręczna	Stainless steel 1.4301

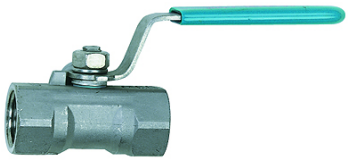

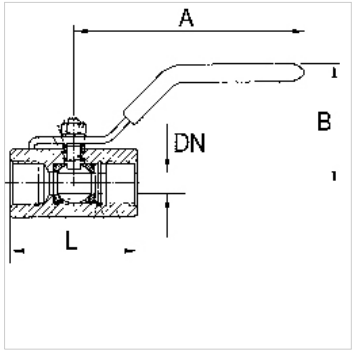

Wskazówka

G thread acc. to DIN EN ISO 228-1, with ISO flange plate (acc. to ISO 5211)
Dalsze informacje na zapytanie.

Wskazówki do zamówienia

For use on devices that have to be vented whenever they are turned off, either because of safety regulations or for technical reasons. The pneumatic devices are disconnected from the system and simultaneously vented each time they are shut off.

Dodatkowe informacje

G thread acc. DIN EN ISO 228-1

Artykuł

Oznaczenie	DN	Gwint	A (mm)	B (mm)	L (mm)	Materiał
K- 07 30 15 36	5	G 1/4	69,0	34,0	39,0	Stainless steel 1.4401/1.4408
K- 07 30 15 37	7	G 3/8	83,0	38,0	44,0	Stainless steel 1.4401/1.4408
K- 07 30 15 38	10	G 1/2	96,0	41,0	59,0	Stainless steel 1.4401/1.4408
K- 07 30 15 39	13	G 3/4	96,0	45,0	60,0	Stainless steel 1.4401/1.4408
K- 07 30 29 80	16	G 1	116,0	52,0	72,0	Stainless steel 1.4401/1.4408
K- 07 30 29 81	20	G 1 1/4	116,0	57,0	77,0	Stainless steel 1.4401/1.4408
K- 07 30 29 82	25	G 1 1/2	158,0	62,0	84,0	Stainless steel 1.4401/1.4408
K- 07 30 29 83	32	G 2	158,0	68,0	100,0	Stainless steel 1.4401/1.4408

Mimo starannego sprawdzenia nie możemy wykluczyć błędów i nie gwarantujemy prawidłowości podanych informacji.