RT
União de redução, em T

HANSA-FLEX

Características

Conexão 1 - 3	Rosca externa métrica cilíndrica
Tipo de vedação 1 - 3	Cone interno 24°
Tipo	União de redução
Modelo	em T
Norma	ISO 8434-1
Escopo de fornecimento	Conexão com porca e anilha
Material	Aço
Proteção de superfície	com revestimento galvanizado



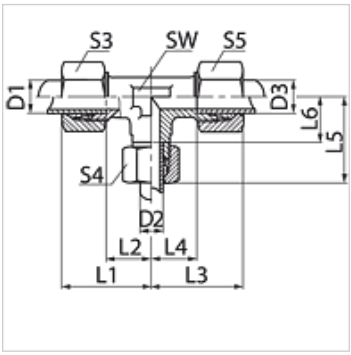

Nota

As instruções relativas à montagem e instalação, às cargas de pressão e às temperaturas operacionais admissíveis constam nas Informações Técnicas para Conexões para tubo.

Artigo

Descrição	Série	Pressão operacional bar	D1 (mm)	D2 (mm)	D3 (mm)	L1 (mm)	L2 (mm)	L3 (mm)	L4 (mm)	L5 (mm)	L6 (mm)	SW (mm)	S3	S4	S5
RT 04 08 04 LL	LL	PN 100	4	8	4	23	13,0	23	13,0	23,0	11,5	12	10	14	10
RT 06 04 06 LL	LL	PN 100	6	4	6	21	9,5	21	9,5	21,0	11,0	11	12	10	12
RT NW 04 06 04 HL	L	PN 315	6	8	6	26	11,0	26	11,0	29,0	14,0	14	14	17	14
RT NW 04 08 04 HL	L	PN 315	6	10	6	30	15,0	30	15,0	30,0	15,0	17	14	19	14
RT NW 06 04 06 HL	L	PN 315	8	6	8	29	14,0	29	14,0	29,0	14,0	14	17	14	17
RT NW 06 06 04 HL	L	PN 315	8	8	6	29	14,0	29	14,0	29,0	14,0	14	17	17	14
RT NW 06 08 06 HL	L	PN 315	8	10	8	30	15,0	30	15,0	30,0	15,0	17	17	19	17
RT NW 06 10 06 HL	L	PN 315	8	12	8	32	17,0	32	17,0	32,0	17,0	19	17	22	17
RT NW 06 13 06 HL	L	PN 315	8	15	8	32	17,0	32	17,0	30,0	15,0	19	17	27	17
RT NW 08 04 08 HL	L	PN 315	10	6	10	30	15,0	30	15,0	30,0	15,0	17	19	14	19
RT NW 08 06 06 HL	L	PN 315	10	8	8	30	15,0	30	15,0	30,0	15,0	17	19	17	17
RT NW 08 06 08 HL	L	PN 315	10	8	10	30	15,0	30	15,0	30,0	15,0	17	19	17	19
RT NW 08 08 04 HL	L	PN 315	10	10	6	30	15,0	30	15,0	30,0	15,0	17	19	19	14
RT NW 08 10 08 HL	L	PN 315	10	12	10	32	19,0	32	19,0	32,0	15,0	17	19	22	19
RT NW 08 13 08 HL	L	PN 315	10	15	10	36	21,0	36	21,0	36,0	21,0	19	19	27	19
RT NW 10 04 10 HL	L	PN 315	12	6	12	32	17,0	32	17,0	32,0	17,0	19	22	14	22
RT NW 10 06 06 HL	L	PN 315	12	8	8	32	17,0	32	17,0	32,0	17,0	19	22	17	17
RT NW 10 06 10 HL	L	PN 315	12	8	12	32	17,0	32	17,0	32,0	17,0	19	22	17	22
RT NW 10 08 08 HL	L	PN 315	12	10	10	32	17,0	32	17,0	32,0	17,0	19	22	19	19
RT NW 10 08 10 HL	L	PN 315	12	10	12	32	17,0	32	17,0	32,0	17,0	19	22	19	22
RT NW 10 10 06 HL	L	PN 315	12	12	8	32	17,0	32	17,0	32,0	17,0	19	22	22	17
RT NW 10 10 08 HL	L	PN 315	12	12	10	32	17,0	32	17,0	32,0	17,0	19	22	22	19
RT NW 10 13 10 HL	L	PN 315	12	15	12	36	21,0	36	21,0	36,0	21,0	19	22	27	22
RT NW 10 16 10 HL	L	PN 315	12	18	12	39	24,0	39	24,0	40,0	23,5	24	22	32	22
RT NW 10 20 10 HL	L	PN 160	12	22	12	39	24,0	39	24,0	40,0	21,0	24	22	36	22
RT NW 13 04 13 HL	L	PN 315	15	6	15	36	21,0	36	21,0	36,0	21,0	19	27	14	27
RT NW 13 06 06 HL	L	PN 315	15	8	8	36	21,0	36	21,0	36,0	21,0	19	27	17	17
RT NW 13 06 13 HL	L	PN 315	15	8	15	36	21,0	36	21,0	36,0	21,0	19	27	17	27
RT NW 13 08 06 HL	L	PN 315	15	10	8	36	21,0	36	21,0	36,0	21,0	19	27	19	17
RT NW 13 08 08 HL	L	PN 315	15	10	10	36	21,0	36	21,0	36,0	21,0	19	27	19	19
RT NW 13 08 13 HL	L	PN 315	15	10	15	36	21,0	36	21,0	36,0	21,0	19	27	19	27
RT NW 13 10 10 HL	L	PN 315	15	12	12	36	21,0	36	21,0	36,0	21,0	19	27	22	22
RT NW 13 10 13 HL	L	PN 315	15	12	15	36	21,0	36	21,0	36,0	21,0	19	27	22	27
RT NW 13 13 08 HL	L	PN 315	15	15	10	36	21,0	36	21,0	36,0	21,0	19	27	27	19
RT NW 13 13 10 HL	L	PN 315	15	15	12	36	21,0	36	21,0	36,0	21,0	19	27	27	22
RT NW 13 16 13 HL	L	PN 315	15	18	15	39	24,0	39	24,0	40,0	23,5	24	27	32	27
RT NW 16 06 06 HL	L	PN 315	18	8	8	39	24,0	39	24,0	40,0	23,5	24	32	17	17
RT NW 16 06 16 HL	L	PN 315	18	8	18	40	23,5	40	23,5	39,0	24,0	24	32	17	32
RT NW 16 08 08 HL	L	PN 315	18	10	10	39	23,5	39	24,0	39,0	24,0	24	32	19	19
RT NW 16 08 16 HL	L	PN 315	18	10	18	40	23,5	40	23,5	39,0	24,0	24	32	19	32
RT NW 16 10 10 HL	L	PN 315	18	12	12	39	23,5	39	24,0	39,0	24,0	24	32	22	22
RT NW 16 10 16 HL	L	PN 315	18	12	18	40	23,5	40	23,5	39,0	24,0	24	32	22	32
RT NW 16 13 16 HL	L	PN 315	18	15	18	40	23,5	40	23,5	39,0	24,0	24	32	27	32

Apesar de uma verificação cuidadosa, não podemos excluir a possibilidade de erros e não assumimos qualquer responsabilidade pelos dados aqui contidos.

RT
União de redução, em T

HANSA-FLEX

Artigo

Descrição	Série	Pressão operacional bar	D1 (mm)	D2 (mm)	D3 (mm)	L1 (mm)	L2 (mm)	L3 (mm)	L4 (mm)	L5 (mm)	L6 (mm)	SW (mm)	S3	S4	S5
RT NW 16 16 06 HL	L	PN 315	18	18	8	40	23,5	40	23,5	39,0	24,0	24	32	32	17
RT NW 16 16 08 HL	L	PN 315	18	18	10	39	23,5	39	24,0	40,0	23,5	24	32	32	19
RT NW 16 16 10 HL	L	PN 315	18	18	12	39	23,5	39	24,0	40,0	23,5	27	32	32	22
RT NW 20 08 20 HL	L	PN 160	22	10	22	44	27,5	44	27,5	43,0	28,0	27	36	19	36
RT NW 20 10 20 HL	L	PN 160	22	12	22	44	27,5	44	27,5	43,0	28,0	27	36	22	36
RT NW 20 13 13 HL	L	PN 160	22	15	15	43	27,5	43	28,0	43,0	28,0	27	36	27	27
RT NW 20 13 20 HL	L	PN 160	22	15	22	44	27,5	44	27,5	43,0	28,0	27	36	27	36
RT NW 20 16 16 HL	L	PN 160	22	18	18	44	27,5	44	27,5	44,0	27,5	27	36	32	32
RT NW 20 16 20 HL	L	PN 160	22	18	22	44	27,5	44	27,5	44,0	27,5	27	36	32	36
RT NW 20 20 16 HL	L	PN 160	22	22	18	44	27,5	44	27,5	44,0	27,5	27	36	36	32
RT NW 20 25 20 HL	L	PN 160	22	28	22	47	30,5	47	30,5	47,0	30,5	36	36	41	36
RT NW 25 08 25 HL	L	PN 160	28	10	28	47	30,5	47	30,5	46,0	31,0	36	41	19	41
RT NW 25 10 25 HL	L	PN 160	28	12	28	47	30,5	47	30,5	46,0	31,0	36	41	22	41
RT NW 25 13 25 HL	L	PN 160	28	15	28	47	30,5	47	30,5	46,0	31,0	36	41	27	41
RT NW 25 16 25 HL	L	PN 160	28	18	28	47	30,5	47	30,5	47,0	30,5	36	41	32	41
RT NW 25 20 20 HL	L	PN 160	28	22	22	47	30,5	47	30,5	47,0	30,5	36	41	36	36
RT NW 25 20 25 HL	L	PN 160	28	22	28	47	30,5	47	30,5	47,0	30,5	36	41	36	41
RT NW 25 25 20 HL	L	PN 160	28	28	22	47	30,5	47	30,5	47,0	30,5	36	41	41	36
RT NW 32 20 32 HL	L	PN 160	35	22	35	56	34,5	56	34,5	54,0	37,5	41	50	36	50
RT NW 32 25 25 HL	L	PN 160	35	28	28	56	34,5	56	37,5	54,0	37,5	41	50	41	41
RT NW 32 25 32 HL	L	PN 160	35	28	35	56	34,5	56	34,5	54,0	37,5	41	50	41	50
RT NW 16 HL 16 HS	L / S	PN 315	20	18	20	48	26,5	48	26,5	40,0	23,5	27	36	32	36
RT NW 04 03 04 HS	S	PN 630	8	6	8	32	16,5	32	16,5	33,0	18,0	19	19	17	19
RT NW 06 03 06 HS	S	PN 630	10	6	10	34	17,5	34	17,5	33,0	18,0	19	22	17	22
RT NW 08 03 08 HS	S	PN 630	12	6	12	38	21,5	38	21,5	37,0	22,0	22	24	17	24
RT NW 08 04 04 HS	S	PN 630	12	8	8	37	21,5	37	22,0	37,0	22,0	22	24	19	19
RT NW 08 04 08 HS	S	PN 630	12	8	12	38	21,5	38	21,5	37,0	22,0	22	24	19	24
RT NW 08 06 08 HS	S	PN 630	12	10	12	38	21,5	38	21,5	38,0	21,5	22	24	22	24
RT NW 08 13 08 HS	S	PN 400	12	16	12	42	25,5	42	25,5	43,0	24,5	24	24	30	24
RT NW 10 06 10 HS	S	PN 630	14	10	14	40	22,0	40	22,0	39,0	22,5	19	27	22	27
RT NW 13 03 13 HS	S	PN 400	16	6	16	43	24,5	43	24,5	41,0	26,0	24	30	17	30
RT NW 13 04 13 HS	S	PN 400	16	8	16	43	24,5	43	24,5	41,0	26,0	24	30	19	30
RT NW 13 06 13 HS	S	PN 400	16	10	16	43	24,5	43	24,5	42,0	25,5	24	30	22	30
RT NW 13 08 13 HS	S	PN 400	16	12	16	43	24,5	43	24,5	42,0	25,5	24	30	24	30
RT NW 13 16 13 HS	S	PN 400	16	20	16	48	28,5	48	28,5	48,0	26,5	27	30	36	30
RT NW 16 06 16 HS	S	PN 400	20	10	20	48	26,5	48	26,5	46,0	29,5	27	36	22	36
RT NW 16 08 16 HS	S	PN 400	20	12	20	48	26,5	48	26,5	46,0	29,5	27	36	24	36
RT NW 16 10 16 HS	S	PN 400	20	14	20	48	26,5	48	26,5	46,0	29,5	27	36	30	36
RT NW 16 13 16 HS	S	PN 400	20	16	20	48	26,5	48	26,5	47,0	28,5	27	36	30	36
RT NW 16 16 20 HS	S	PN 400	20	20	25	48	26,5	48	26,5	47,0	28,5	32	36	36	46
RT NW 16 20 16 HS	S	PN 400	20	25	20	53	31,5	53	31,5	54,0	30,0	36	36	46	36
RT NW 20 13 20 HS	S	PN 400	25	16	25	54	30,0	54	30,0	52,0	33,5	36	46	30	46
RT NW 20 16 20 HS	S	PN 400	25	20	25	54	31,0	54	30,0	53,0	31,5	36	46	36	46
RT NW 20 25 20 HS	S	PN 400	25	30	25	61	37,0	61	37,0	62,0	35,5	41	46	50	46
RT NW 25 13 25 HS	S	PN 400	30	16	30	62	35,5	62	35,5	59,0	40,5	41	46	30	50
RT NW 25 16 25 HS	S	PN 400	30	20	30	62	35,5	62	35,5	60,0	38,5	41	50	36	50
RT NW 25 20 25 HS	S	PN 400	30	25	30	62	35,5	62	35,5	61,0	37,0	41	50	46	50

Série: LL = muito leve L = leve S = pesada – PN = Pressão nominal PB = Pressão operacional máx. – D1, D2, D3 = diâmetro externo do tubo

Variantes do produto

RT VA	União de redução, em T, Aço inoxidável
XRT	União de redução, em T, Aço

Apesar de uma verificação cuidadosa, não podemos excluir a possibilidade de erros e não assumimos qualquer responsabilidade pelos dados aqui contidos.