V-LL VA / V-HL VA / V-HS VA

Conexão roscada

HANSA-FLEX

Características

Conexão 1	Rosca externa métrica cilíndrica
Tipo de vedação 1	Cone interno 24°
Conexão 2	Rosca externa métrica cilíndrica
Tipo de vedação 2	Cone interno 24°
Tipo	União roscada
Modelo	reto
Norma	ISO 8434-1
Escopo de fornecimento	Conexão com porca e anilha
Material	Aço inoxidável



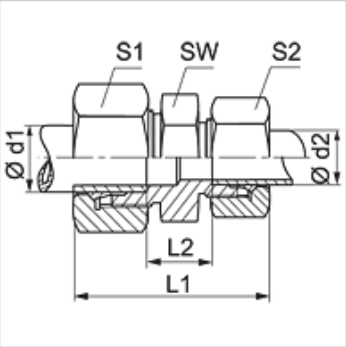

Nota

As instruções relativas à montagem e instalação, às cargas de pressão e às temperaturas operacionais admissíveis constam nas Informações Técnicas para Conexões para tubo.

Artigo

Descrição	Série	Pressão operacional bar	Ø d1 (mm)	Ø d2 (mm)	L1 (mm)	L2 (mm)	SW (mm)	S1	S2
V 04 LL VA	LL	PN 100	4	4	31,0	12,0	9	10	10
V 06 LL 04 VA	LL	PN 100	6	4	32,0	10,5	11	12	10
V 06 LL VA	LL	PN 100	6	6	32,0	9,0	11	12	12
V 08 LL 04 VA	LL	PN 100	8	4	34,0	12,5	12	14	10
V 08 LL 06 VA	LL	PN 100	8	6	34,0	11,0	12	14	12
V 08 LL VA	LL	PN 100	8	8	35,0	12,0	12	14	14
V NW 04 HL VA	L	PN 315	6	6	39,0	10,0	12	14	14
V NW 06 HL 04 VA	L	PN 315	8	6	41,0	11,0	14	14	14
V NW 06 HL VA	L	PN 315	8	8	40,0	11,0	14	17	17
V NW 08 HL 04 VA	L	PN 315	10	6	42,0	12,0	17	19	14
V NW 08 HL 06 VA	L	PN 315	10	8	42,0	12,0	17	19	17
V NW 08 HL VA	L	PN 315	10	10	42,0	13,0	17	19	19
V NW 10 HL 04 VA	L	PN 315	12	6	42,0	13,0	19	22	14
V NW 10 HL 06 VA	L	PN 315	12	8	42,0	13,0	19	22	17
V NW 10 HL 08 VA	L	PN 315	12	10	44,0	14,0	19	22	19
V NW 10 HL VA	L	PN 315	12	12	43,0	14,0	19	22	22
V NW 13 HL 04 VA	L	PN 315	15	6	43,5	14,0	24	27	14
V NW 13 HL 06 VA	L	PN 315	15	8	43,5	14,0	24	27	17
V NW 13 HL 08 VA	L	PN 315	15	10	45,0	15,0	24	27	19
V NW 13 HL 10 VA	L	PN 315	15	12	45,0	15,0	24	27	22
V NW 13 HL VA	L	PN 315	15	15	46,0	16,0	24	27	27
V NW 16 HL 06 VA	L	PN 315	18	8	45,0	15,0	27	32	17
V NW 16 HL 08 VA	L	PN 315	18	10	46,0	15,5	27	32	19
V NW 16 HL 10 VA	L	PN 315	18	12	47,0	15,5	27	32	22
V NW 16 HL 13 VA	L	PN 315	18	15	48,0	16,5	27	32	27
V NW 16 HL VA	L	PN 315	18	18	48,0	16,0	27	32	32
V NW 20 HL 08 VA	L	PN 160	22	10	48,0	17,0	32	36	19
V NW 20 HL 10 VA	L	PN 160	22	12	48,0	17,5	32	36	22
V NW 20 HL 13 VA	L	PN 160	22	15	50,0	18,5	32	36	27
V NW 20 HL 16 VA	L	PN 160	22	18	51,0	18,0	32	36	32
V NW 20 HL VA	L	PN 160	22	22	52,0	20,0	32	36	36
V NW 25 HL 08 VA	L	PN 160	28	10	49,5	18,5	41	41	19
V NW 25 HL 10 VA	L	PN 160	28	12	51,0	19,0	41	41	22
V NW 25 HL 13 VA	L	PN 160	28	15	51,0	19,5	41	41	27
V NW 25 HL 16 VA	L	PN 160	28	18	52,0	19,0	41	41	32
V NW 25 HL 20 VA	L	PN 160	28	22	54,0	21,0	41	41	36
V NW 25 HL VA	L	PN 160	28	28	54,0	21,0	41	41	41
V NW 32 HL 13 VA	L	PN 160	35	15	64,0	21,0	46	50	27
V NW 32 HL 16 VA	L	PN 160	35	18	66,5	19,0	46	50	32
V NW 32 HL 20 VA	L	PN 160	35	22	59,0	21,0	46	50	36
V NW 32 HL 25 VA	L	PN 160	35	28	59,0	21,0	46	50	41
V NW 32 HL VA	L	PN 160	35	35	63,0	20,0	46	50	50
V NW 40 HL 13 VA	L	PN 160	42	15	70,5	21,0	55	60	27

Apesar de uma verificação cuidadosa, não podemos excluir a possibilidade de erros e não assumimos qualquer responsabilidade pelos dados aqui contidos.

V-LL VA / V-HL VA / V-HS VA

Conexão roscada

HANSA-FLEX

Artigo

Descrição	Série	Pressão operacional bar	Ø d1 (mm)	Ø d2 (mm)	L1 (mm)	L2 (mm)	SW (mm)	S1	S2
V NW 40 HL 16 VA	L	PN 160	42	18	70,5	21,0	55	60	32
V NW 40 HL 20 VA	L	PN 160	42	22	70,5	21,0	55	60	32
V NW 40 HL 25 VA	L	PN 160	42	28	62,0	22,5	65	60	41
V NW 40 HL 32 VA	L	PN 160	42	35	66,0	21,5	55	60	50
V NW 40 HL VA	L	PN 160	42	42	66,0	21,0	55	60	60
V NW 03 HS VA	S	PN 630	6	6	45,0	16,0	14	17	17
V NW 04 HS 03 VA	S	PN 630	8	6	48,0	18,0	17	19	17
V NW 04 HS VA	S	PN 630	8	8	47,0	18,0	17	19	19
V NW 06 HS 03 VA	S	PN 630	10	6	49,0	17,5	19	22	17
V NW 06 HS 04 VA	S	PN 630	10	8	49,0	17,5	19	22	19
V NW 06 HS VA	S	PN 630	10	10	49,0	17,0	19	22	22
V NW 08 HS 03 VA	S	PN 630	12	6	51,0	19,5	22	24	17
V NW 08 HS 04 VA	S	PN 630	12	8	51,0	19,5	22	24	19
V NW 08 HS 06 VA	S	PN 630	12	10	52,0	19,0	22	24	22
V NW 08 HS VA	S	PN 630	12	12	51,0	19,0	22	24	24
V NW 10 HS 03 VA	S	PN 630	14	6	53,0	20,0	24	27	17
V NW 10 HS 04 VA	S	PN 630	14	8	54,0	20,0	24	27	19
V NW 10 HS 06 VA	S	PN 630	14	10	55,0	20,5	24	27	22
V NW 10 HS 08 VA	S	PN 630	14	12	55,0	20,5	24	27	24
V NW 10 HS VA	S	PN 630	14	14	57,0	22,0	24	27	27
V NW 13 HS 03 VA	S	PN 400	16	6	53,0	20,0	27	30	17
V NW 13 HS 04 VA	S	PN 400	16	8	54,0	20,0	27	30	19
V NW 13 HS 06 VA	S	PN 400	16	10	54,0	20,0	27	30	22
V NW 13 HS 08 VA	S	PN 400	16	12	55,0	20,0	27	30	24
V NW 13 HS 10 VA	S	PN 400	16	14	58,0	21,5	27	30	27
V NW 13 HS VA	S	PN 400	16	16	57,0	21,0	27	30	30
V NW 16 HS 03 VA	S	PN 400	20	6	64,5	23,5	32	36	17
V NW 16 HS 04 VA	S	PN 400	20	8	64,5	21,0	32	36	19
V NW 16 HS 06 VA	S	PN 400	20	10	59,5	22,0	32	36	22
V NW 16 HS 08 VA	S	PN 400	20	12	59,5	22,0	32	36	24
V NW 16 HS 10 VA	S	PN 400	20	14	63,0	23,5	32	36	27
V NW 16 HS 13 VA	S	PN 400	20	16	63,0	23,0	32	36	30
V NW 16 HS VA	S	PN 400	20	20	66,0	23,0	32	36	36
V NW 20 HS 04 VA	S	PN 400	25	8	71,5	26,5	41	46	19
V NW 20 HS 06 VA	S	PN 400	25	10	72,5	27,5	41	46	22
V NW 20 HS 08 VA	S	PN 400	25	12	72,5	24,0	41	46	24
V NW 20 HS 10 VA	S	PN 400	25	14	74,5	26,5	41	46	27
V NW 20 HS 13 VA	S	PN 400	25	16	68,0	25,5	41	46	30
V NW 20 HS 16 VA	S	PN 400	25	20	71,0	25,5	41	46	36
V NW 20 HS VA	S	PN 400	25	25	74,0	26,0	41	46	46
V NW 25 HS 06 VA	S	PN 400	30	10	74,5	27,0	46	50	22
V NW 25 HS 08 VA	S	PN 400	30	12	74,5	27,0	46	50	24
V NW 25 HS 10 VA	S	PN 400	30	14	74,5	27,0	46	50	46
V NW 25 HS 13 VA	S	PN 400	30	16	70,0	25,0	46	50	30
V NW 25 HS 16 VA	S	PN 400	30	20	74,0	26,0	46	50	36
V NW 25 HS 20 VA	S	PN 400	30	25	77,0	26,5	46	50	46
V NW 25 HS VA	S	PN 400	30	30	80,0	27,0	46	50	50
V NW 32 HS 06 VA	S	PN 315	38	10	86,0	26,5	55	60	22
V NW 32 HS 08 VA	S	PN 315	38	12	86,0	26,5	55	60	24
V NW 32 HS 10 VA	S	PN 315	38	14	86,0	26,5	55	60	27
V NW 32 HS 13 VA	S	PN 315	38	16	81,0	29,0	55	60	30
V NW 32 HS 16 VA	S	PN 315	38	20	88,0	28,0	55	60	36
V NW 32 HS 20 VA	S	PN 315	38	25	84,0	29,0	55	60	46
V NW 32 HS 25 VA	S	PN 315	38	30	87,0	29,5	55	60	50
V NW 32 HS VA	S	PN 315	38	38	90,0	29,0	55	60	60

Série: LL = muito leve L = leve S = pesada – PN = Pressão nominal PB = Pressão operacional máx. – Ø d1 = diâmetro externo do tubo – Ø d2 = diâmetro externo do tubo

Variantes do produto

V-LL / V-HL / V-HS	Conexão roscada, Aço
V-LL MG / V-HL MG / V-HS MG	Conexão roscada, Latão
XV VA	Conexão roscada, Aço inoxidável

Apesar de uma verificação cuidadosa, não podemos excluir a possibilidade de erros e não assumimos qualquer responsabilidade pelos dados aqui contidos.