XV VA
Conexão roscada

HANSA-FLEX

Características

Conexão 1	Rosca externa métrica cilíndrica
Tipo de vedação 1	Cone interno 24°
Conexão 2	Rosca externa métrica cilíndrica
Tipo de vedação 2	Cone interno 24°
Tipo	União roscada
Modelo	reto
Norma	ISO 8434-1
Escopo de fornecimento	Conexão (sem porca e anilha)
Material	Aço inoxidável



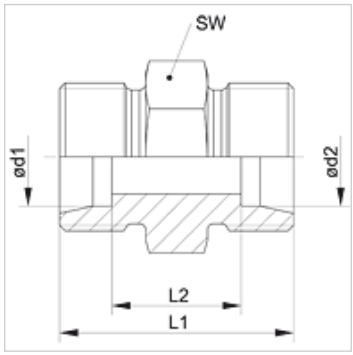

Nota

As instruções relativas à montagem e instalação, às cargas de pressão e às temperaturas operacionais admissíveis constam nas Informações Técnicas para Conexões para tubo.

Artigo

Descrição	Série	Pressão operacional bar	Ø d1 (mm)	Ø d2 (mm)	L1 (mm)	L2 (mm)	SW (mm)
XV 04 LL VA	LL	PN 100	4	4	20,0	12,0	9
XV 06 LL 04 VA	LL	PN 100	6	4	20,0	10,5	11
XV 06 LL VA	LL	PN 100	6	6	20,0	9,0	11
XV 08 LL 04 VA	LL	PN 100	8	4	22,0	12,5	12
XV 08 LL 06 VA	LL	PN 100	8	6	22,0	11,0	12
XV 08 LL VA	LL	PN 100	8	8	23,0	12,0	12
XV NW 04 HL VA	L	PN 315	6	6	24,0	10,0	12
XV NW 06 HL 04 VA	L	PN 315	8	6	25,0	11,0	14
XV NW 06 HL VA	L	PN 315	8	8	25,0	11,0	14
XV NW 08 HL 04 VA	L	PN 315	10	6	26,0	12,0	17
XV NW 08 HL 06 VA	L	PN 315	10	8	26,0	12,0	17
XV NW 08 HL VA	L	PN 315	10	10	27,0	13,0	17
XV NW 10 HL 04 VA	L	PN 315	12	6	27,0	13,0	19
XV NW 10 HL 06 VA	L	PN 315	12	8	27,0	13,0	19
XV NW 10 HL 08 VA	L	PN 315	12	10	28,0	14,0	19
XV NW 10 HL VA	L	PN 315	12	12	28,0	14,0	19
XV NW 13 HL 04 VA	L	PN 315	15	6	28,0	14,0	24
XV NW 13 HL 06 VA	L	PN 315	15	8	28,0	14,0	24
XV NW 13 HL 08 VA	L	PN 315	15	10	29,0	15,0	24
XV NW 13 HL 10 VA	L	PN 315	15	12	29,0	15,0	24
XV NW 13 HL VA	L	PN 315	15	15	30,0	16,0	24
XV NW 16 HL 06 VA	L	PN 315	18	8	29,0	14,5	27
XV NW 16 HL 08 VA	L	PN 315	18	10	30,0	15,5	27
XV NW 16 HL 10 VA	L	PN 315	18	12	30,0	15,5	27
XV NW 16 HL 13 VA	L	PN 315	18	15	31,0	16,5	27
XV NW 16 HL VA	L	PN 315	18	18	31,0	16,0	27
XV NW 20 HL 08 VA	L	PN 160	22	10	32,0	17,5	32
XV NW 20 HL 10 VA	L	PN 160	22	12	32,0	17,5	32
XV NW 20 HL 13 VA	L	PN 160	22	15	33,0	18,5	32
XV NW 20 HL 16 VA	L	PN 160	22	18	33,0	18,0	32
XV NW 20 HL VA	L	PN 160	22	22	35,0	20,0	32
XV NW 25 HL 08 VA	L	PN 160	28	10	34,0	19,5	41
XV NW 25 HL 10 VA	L	PN 160	28	12	34,0	19,5	41
XV NW 25 HL 13 VA	L	PN 160	28	15	35,0	20,5	41
XV NW 25 HL 16 VA	L	PN 160	28	18	35,0	20,0	41
XV NW 25 HL 20 VA	L	PN 160	28	22	37,0	22,0	41
XV NW 25 HL VA	L	PN 160	28	28	36,0	21,0	41
XV NW 32 HL 13 VA	L	PN 160	35	15	37,0	19,5	46
XV NW 32 HL 16 VA	L	PN 160	35	18	37,0	19,0	46
XV NW 32 HL 20 VA	L	PN 160	35	22	39,0	21,0	46
XV NW 32 HL 25 VA	L	PN 160	35	28	39,0	21,0	46
XV NW 32 HL VA	L	PN 160	35	35	41,0	20,0	46
XV NW 40 HL 13 VA	L	PN 160	42	15	39,0	21,0	55

Apesar de uma verificação cuidadosa, não podemos excluir a possibilidade de erros e não assumimos qualquer responsabilidade pelos dados aqui contidos.

Artigo

Descrição	Série	Pressão operacional bar	Ø d1 (mm)	Ø d2 (mm)	L1 (mm)	L2 (mm)	SW (mm)
XV NW 40 HL 16 VA	L	PN 160	42	18	39,0	21,5	55
XV NW 40 HL 20 VA	L	PN 160	42	22	39,5	21,0	55
XV NW 40 HL 25 VA	L	PN 160	42	28	41,0	22,5	55
XV NW 40 HL 32 VA	L	PN 160	42	35	43,0	21,5	55
XV NW 40 HL VA	L	PN 160	42	42	66,0	21,0	55
XV NW 03 HS VA	S	PN 630	6	6	30,0	16,0	14
XV NW 04 HS 03 VA	S	PN 630	8	6	32,0	18,0	17
XV NW 04 HS VA	S	PN 630	8	8	32,0	18,0	17
XV NW 06 HS 03 VA	S	PN 630	10	6	32,0	17,5	19
XV NW 06 HS 04 VA	S	PN 630	10	8	32,0	17,5	19
XV NW 06 HS VA	S	PN 630	10	10	32,0	17,0	19
XV NW 08 HS 03 VA	S	PN 630	12	6	34,0	19,5	22
XV NW 08 HS 04 VA	S	PN 630	12	8	34,0	19,5	22
XV NW 08 HS 06 VA	S	PN 630	12	10	34,0	19,0	22
XV NW 08 HS VA	S	PN 630	12	12	34,0	19,0	22
XV NW 10 HS 03 VA	S	PN 630	14	6	36,0	21,0	24
XV NW 10 HS 04 VA	S	PN 630	14	8	36,0	21,0	24
XV NW 10 HS 06 VA	S	PN 630	14	10	36,0	20,5	24
XV NW 10 HS 08 VA	S	PN 630	14	12	36,0	20,5	24
XV NW 10 HS VA	S	PN 630	14	14	38,0	22,0	24
XV NW 13 HS 03 VA	S	PN 400	16	6	36,0	20,5	27
XV NW 13 HS 04 VA	S	PN 400	16	8	36,0	20,5	27
XV NW 13 HS 06 VA	S	PN 400	16	10	36,0	20,0	27
XV NW 13 HS 08 VA	S	PN 400	16	12	36,0	20,0	27
XV NW 13 HS 10 VA	S	PN 400	16	14	38,0	21,5	27
XV NW 13 HS VA	S	PN 400	16	16	38,0	21,0	27
XV NW 16 HS 03 VA	S	PN 400	20	6	40,0	22,5	32
XV NW 16 HS 04 VA	S	PN 400	20	8	40,0	22,5	32
XV NW 16 HS 06 VA	S	PN 400	20	10	40,0	22,0	32
XV NW 16 HS 08 VA	S	PN 400	20	12	40,0	22,0	32
XV NW 16 HS 10 VA	S	PN 400	20	14	42,0	23,5	32
XV NW 16 HS 13 VA	S	PN 400	20	16	42,0	23,0	32
XV NW 16 HS VA	S	PN 400	20	20	44,0	23,0	32
XV NW 20 HS 04 VA	S	PN 400	25	8	44,0	25,0	41
XV NW 20 HS 06 VA	S	PN 400	25	10	44,0	24,5	41
XV NW 20 HS 08 VA	S	PN 400	25	12	44,0	24,5	41
XV NW 20 HS 10 VA	S	PN 400	25	14	46,0	26,0	41
XV NW 20 HS 13 VA	S	PN 400	25	16	46,0	25,5	41
XV NW 20 HS 16 VA	S	PN 400	25	20	48,0	25,5	41
XV NW 20 HS VA	S	PN 400	25	25	50,0	26,0	41
XV NW 25 HS 06 VA	S	PN 400	30	10	46,5	25,5	46
XV NW 25 HS 08 VA	S	PN 400	30	12	46,0	25,0	46
XV NW 25 HS 10 VA	S	PN 400	30	14	48,0	26,5	46
XV NW 25 HS 13 VA	S	PN 400	30	16	48,0	26,0	46
XV NW 25 HS 16 VA	S	PN 400	30	20	50,0	26,0	46
XV NW 25 HS 20 VA	S	PN 400	30	25	52,0	26,5	46
XV NW 25 HS VA	S	PN 400	30	30	54,0	27,0	46
XV NW 32 HS 06 VA	S	PN 315	38	10	51,5	28,0	55
XV NW 32 HS 08 VA	S	PN 315	38	12	51,0	27,5	55
XV NW 32 HS 10 VA	S	PN 315	38	14	53,0	29,0	55
XV NW 32 HS 13 VA	S	PN 315	38	16	53,0	28,5	55
XV NW 32 HS 16 VA	S	PN 315	38	20	55,0	28,5	55
XV NW 32 HS 20 VA	S	PN 315	38	25	57,0	29,0	55
XV NW 32 HS 25 VA	S	PN 315	38	30	59,0	29,5	55
XV NW 32 HS VA	S	PN 315	38	38	61,0	29,0	55

Série: LL = muito leve L = leve S = pesada – PN = Pressão nominal PB = Pressão operacional máx. – Ø d1 = diâmetro externo do tubo – Ø d2 = diâmetro externo do tubo

Variantes do produto

XV	Conexão roscada, Aço
V-LL VA / V-HL VA / V-HS VA	Conexão roscada, Aço inoxidável

Apesar de uma verificação cuidadosa, não podemos excluir a possibilidade de erros e não assumimos qualquer responsabilidade pelos dados aqui contidos.