XVR VA
Conexão roscada

HANSA-FLEX

Características

Conexão 1	Rosca externa BSP cilíndrica
Tipo de vedação 1	Forma B
Conexão 2	Rosca externa métrica cilíndrica
Tipo de vedação 2	Cone interno 24°
Tipo	União macho
Modelo	reto
Norma	DIN 3901
Escopo de fornecimento	Conexão (sem porca e anilha)
Material	Aço inoxidável



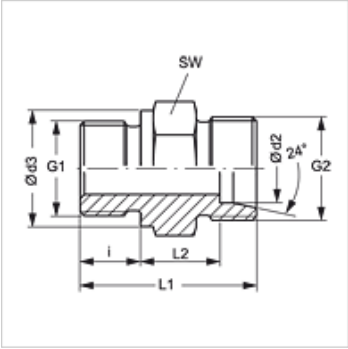

Nota

As instruções relativas à montagem e instalação, às cargas de pressão e às temperaturas operacionais admissíveis constam nas Informações Técnicas para Conexões para tubo.

Artigo

Descrição	Série	Pressão operacional bar	Ø d2 (mm)	G1	G2	Ø d3 (mm)	i (mm)	L1 (mm)	L2 (mm)	SW (mm)
XVR NW 04 HL VA	L	PN 315	6	Rosca 1/8" -28	M 12 x 1,5	14	8	23,5	8,5	14
XVR NW 04 HL 1/4 VA	L	PN 315	6	Rosca 1/4" -19	M 12 x 1,5	18	12	29,0	10,0	19
XVR NW 04 HL 3/8 VA	L	PN 315	6	Rosca 3/8" -19	M 12 x 1,5	22	12	30,5	11,5	22
XVR NW 04 HL 1/2 VA	L	PN 315	6	Rosca 1/2" -14	M 12 x 1,5	26	14	32,0	12,0	27
XVR NW 06 HL 1/8 VA	L	PN 315	8	Rosca 1/8" -28	M 14 x 1,5	14	8	24,0	9,0	14
XVR NW 06 HL VA	L	PN 315	8	Rosca 1/4" -19	M 14 x 1,5	18	12	29,0	10,0	19
XVR NW 06 HL 3/8 VA	L	PN 315	8	Rosca 3/8" -19	M 14 x 1,5	22	12	30,5	11,5	22
XVR NW 06 HL 1/2 VA	L	PN 315	8	Rosca 1/2" -14	M 14 x 1,5	26	14	33,0	12,0	27
XVR NW 08 HL 1/8 VA	L	PN 315	10	Rosca 1/8" -28	M 16 x 1,5	14	8	25,5	10,5	17
XVR NW 08 HL VA	L	PN 315	10	Rosca 1/4" -19	M 16 x 1,5	18	12	30,0	11,0	19
XVR NW 08 HL 3/8 VA	L	PN 315	10	Rosca 3/8" -19	M 16 x 1,5	22	12	31,5	12,5	22
XVR NW 08 HL 1/2 VA	L	PN 315	10	Rosca 1/2" -14	M 16 x 1,5	26	14	34,0	13,0	27
XVR NW 08 HL 3/4 VA	L	PN 315	10	Rosca 3/4" -14	M 16 x 1,5	32	16	37,0	14,0	32
XVR NW 10 HL 1/8 VA	L	PN 315	12	Rosca 1/8" -28	M 18 x 1,5	14	8	26,5	11,5	19
XVR NW 10 HL 1/4 VA	L	PN 315	12	Rosca 1/4" -19	M 18 x 1,5	18	12	31,0	12,0	19
XVR NW 10 HL VA	L	PN 315	12	Rosca 3/8" -19	M 18 x 1,5	22	12	31,5	12,5	22
XVR NW 10 HL 1/2 VA	L	PN 315	12	Rosca 1/2" -14	M 18 x 1,5	26	14	34,0	13,0	27
XVR NW 10 HL 3/4 VA	L	PN 315	12	Rosca 3/4" -14	M 18 x 1,5	32	16	37,0	14,0	32
XVR NW 13 HL 1/4 VA	L	PN 315	15	Rosca 1/4" -19	M 22 x 1,5	18	12	32,0	13,0	24
XVR NW 13 HL 3/8 VA	L	PN 250	15	Rosca 3/8" -19	M 22 x 1,5	22	12	33,0	14,0	24
XVR NW 13 HL VA	L	PN 250	15	Rosca 1/2" -14	M 22 x 1,5	26	14	35,0	14,0	27
XVR NW 13 HL 3/4 VA	L	PN 250	15	Rosca 3/4" -14	M 22 x 1,5	32	16	38,0	15,0	32
XVR NW 16 HL 3/8 VA	L	PN 250	18	Rosca 3/8" -19	M 26 x 1,5	22	12	33,5	14,0	27
XVR NW 16 HL VA	L	PN 250	18	Rosca 1/2" -14	M 26 x 1,5	26	14	36,0	14,5	27
XVR NW 16 HL 3/4 VA	L	PN 250	18	Rosca 3/4" -14	M 26 x 1,5	32	16	38,0	14,5	32
XVR NW 16 HL 1 VA	L	PN 250	18	Rosca 1" -11	M 26 x 1,5	39	18	40,5	15,0	41
XVR NW 20 HL 3/8 VA	L	PN 160	22	Rosca 3/8" -19	M 30 x 2	22	12	36,0	16,5	32
XVR NW 20 HL 1/2 VA	L	PN 160	22	Rosca 1/2" -14	M 30 x 2	26	14	38,0	16,5	32
XVR NW 20 HL VA	L	PN 160	22	Rosca 3/4" -14	M 30 x 2	32	16	40,0	16,5	32
XVR NW 20 HL 1 VA	L	PN 160	22	Rosca 1" -11	M 30 x 2	39	18	43,0	17,5	41
XVR NW 20 HL 1 1/4 VA	L	PN 160	22	Rosca 1.1/4" -11	M 30 x 2	49	20	46,0	18,5	50
XVR NW 25 HL 1/2 VA	L	PN 160	28	Rosca 1/2" -14	M 36 x 2	26	14	40,0	18,5	41
XVR NW 25 HL 3/4 VA	L	PN 160	28	Rosca 3/4" -14	M 36 x 2	32	16	41,0	17,5	41
XVR NW 25 HL VA	L	PN 160	28	Rosca 1" -11	M 36 x 2	39	18	43,0	17,5	41
XVR NW 25 HL 11/4 VA	L	PN 160	28	Rosca 1.1/4" -11	M 36 x 2	49	20	46,0	18,5	50
XVR NW 32 HL 1/2 VA	L	PN 160	35	Rosca 1/2" -14	M 45 x 2	26	14	42,0	17,5	46
XVR NW 32 HL 3/4 VA	L	PN 160	35	Rosca 3/4" -14	M 45 x 2	32	16	45,0	18,5	46
XVR NW 32 HL 1 VA	L	PN 160	35	Rosca 1" -11	M 45 x 2	39	18	47,0	18,5	50
XVR NW 32 HL VA	L	PN 160	35	Rosca 1.1/4" -11	M 45 x 2	49	20	48,0	17,5	50
XVR NW 32 HL 11/2 VA	L	PN 160	35	Rosca 1.1/2" -11	M 45 x 2	55	22	51,0	18,5	55
XVR NW 40 HL 1 VA	L	PN 160	42	Rosca 1" -11	M 52 x 2	39	18	48,0	19,0	55
XVR NW 40 HL 11/4 VA	L	PN 160	42	Rosca 1.1/4" -11	M 52 x 2	49	20	50,0	19,0	55
XVR NW 40 HL VA	L	PN 160	42	Rosca 1.1/2" -11	M 52 x 2	55	22	52,0	19,0	55

Apesar de uma verificação cuidadosa, não podemos excluir a possibilidade de erros e não assumimos qualquer responsabilidade pelos dados aqui contidos.

XVR VA
Conexão roscada

HANSA-FLEX

Artigo

Descrição	Série	Pressão operacional bar	Ø d2 (mm)	G1	G2	Ø d3 (mm)	i (mm)	L1 (mm)	L2 (mm)	SW (mm)
XVR NW 03 HS 1/8 VA	S	PN 400	6	Rosca 1/8" -28	M 14 x 1,5	14	8	27,5	12,5	17
XVR NW 03 HS VA	S	PN 400	6	Rosca 1/4" -19	M 14 x 1,5	18	12	32,0	13,0	19
XVR NW 03 HS 3/8 VA	S	PN 400	6	Rosca 3/8" -19	M 14 x 1,5	22	12	32,5	13,5	22
XVR NW 03 HS 1/2 VA	S	PN 400	6	Rosca 1/2" -14	M 14 x 1,5	26	14	35,0	14,0	27
XVR NW 03 HS 3/4 VA	S	PN 400	6	Rosca 3/4" -14	M 14 x 1,5	32	16	38,0	15,0	32
XVR NW 04 HS 1/8 VA	S	PN 400	8	Rosca 1/8" -28	M 16 x 1,5	14	8	27,0	12,0	17
XVR NW 04 HS VA	S	PN 400	8	Rosca 1/4" -19	M 16 x 1,5	18	12	34,0	15,0	19
XVR NW 04 HS 3/8 VA	S	PN 400	8	Rosca 3/8" -19	M 16 x 1,5	22	12	34,5	15,5	22
XVR NW 04 HS 1/2 VA	S	PN 400	8	Rosca 1/2" -14	M 16 x 1,5	26	14	37,0	16,0	27
XVR NW 06 HS 1/8 VA	S	PN 400	10	Rosca 1/8" -28	M 18 x 1,5	14	8	29,5	14,0	19
XVR NW 06 HS 1/4 VA	S	PN 400	10	Rosca 1/4" -19	M 18 x 1,5	18	12	34,0	14,5	22
XVR NW 06 HS VA	S	PN 400	10	Rosca 3/8" -19	M 18 x 1,5	22	12	34,5	15,0	22
XVR NW 06 HS 1/2 VA	S	PN 400	10	Rosca 1/2" -14	M 18 x 1,5	26	14	39,0	17,5	27
XVR NW 06 HS 3/4 VA	S	PN 400	10	Rosca 3/4" -14	M 18 x 1,5	32	16	38,0	14,5	32
XVR NW 08 HS 1/4 VA	S	PN 400	12	Rosca 1/4" -19	M 20 x 1,5	18	12	36,0	16,5	22
XVR NW 08 HS VA	S	PN 400	12	Rosca 3/8" -19	M 20 x 1,5	22	12	36,5	17,5	22
XVR NW 08 HS 1/2 VA	S	PN 400	12	Rosca 1/2" -14	M 20 x 1,5	26	14	39,0	17,5	27
XVR NW 08 HS 3/4 VA	S	PN 400	12	Rosca 3/4" -14	M 20 x 1,5	32	16	41,0	17,5	32
XVR NW 10 HS 1/4 VA	S	PN 400	14	Rosca 1/4" -19	M 22 x 1,5	18	12	38,5	18,5	24
XVR NW 10 HS 3/8 VA	S	PN 400	14	Rosca 3/8" -19	M 22 x 1,5	22	12	38,5	18,5	24
XVR NW 10 HS VA	S	PN 400	14	Rosca 1/2" -14	M 22 x 1,5	26	14	41,0	19,0	27
XVR NW 10 HS 3/4 VA	S	PN 400	14	Rosca 3/4" -14	M 22 x 1,5	32	16	43,0	19,0	32
XVR NW 10 HS 1 VA	S	PN 250	14	Rosca 1" -11	M 22 x 1,5	39	18	48,0	22,0	41
XVR NW 13 HS 1/4 VA	S	PN 400	16	Rosca 1/4" -19	M 24 x 1,5	18	12	38,0	17,5	27
XVR NW 13 HS 3/8 VA	S	PN 400	16	Rosca 3/8" -19	M 24 x 1,5	22	12	39,0	18,5	27
XVR NW 13 HS VA	S	PN 400	16	Rosca 1/2" -14	M 24 x 1,5	26	14	41,0	18,5	27
XVR NW 13 HS 3/4 VA	S	PN 400	16	Rosca 3/4" -14	M 24 x 1,5	32	16	45,0	20,5	32
XVR NW 13 HS 1 VA	S	PN 400	16	Rosca 1" -11	M 24 x 1,5	39	18	43,5	21,5	41
XVR NW 16 HS 3/8 VA	S	PN 400	20	Rosca 3/8" -19	M 30 x 2	22	12	45,0	22,5	32
XVR NW 16 HS 1/2 VA	S	PN 400	20	Rosca 1/2" -14	M 30 x 2	26	14	45,0	20,5	32
XVR NW 16 HS VA	S	PN 400	20	Rosca 3/4" -14	M 30 x 2	32	16	47,0	20,5	32
XVR NW 16 HS 1 VA	S	PN 250	20	Rosca 1" -11	M 30 x 2	39	18	50,0	21,5	41
XVR NW 16 HS 1 1/4 VA	S	PN 400	20	Rosca 1.1/4" -11	M 30 x 2	49	20	53,0	22,5	50
XVR NW 16 HS 1 1/2 VA	S	PN 400	20	Rosca 1.1/2" -11	M 30 x 2	55	22	58,0	25,5	55
XVR NW 20 HS 1/2 VA	S	PN 250	25	Rosca 1/2" -14	M 36 x 2	26	14	49,0	23,0	41
XVR NW 20 HS 3/4 VA	S	PN 250	25	Rosca 3/4" -14	M 36 x 2	32	16	51,0	23,0	41
XVR NW 20 HS VA	S	PN 250	25	Rosca 1" -11	M 36 x 2	39	18	53,0	23,0	41
XVR NW 20 HS 1 1/4 VA	S	PN 160	25	Rosca 1.1/4" -11	M 36 x 2	49	20	56,0	24,0	50
XVR NW 20 HS 1 1/2 VA	S	PN 400	25	Rosca 1.1/2" -11	M 36 x 2	55	22	60,0	26,0	55
XVR NW 25 HS 3/4 VA	S	PN 160	30	Rosca 3/4" -14	M 42 x 2	32	16	53,0	23,5	46
XVR NW 25 HS 1 VA	S	PN 160	30	Rosca 1" -11	M 42 x 2	39	18	55,0	23,5	46
XVR NW 25 HS VA	S	PN 160	30	Rosca 1.1/4" -11	M 42 x 2	49	20	57,0	23,5	50
XVR NW 25 HS 1 1/2 VA	S	PN 160	30	Rosca 1.1/2" -11	M 42 x 2	55	22	62,0	26,5	55
XVR NW 32 HS 1 VA	S	PN 160	38	Rosca 1" -11	M 52 x 2	39	18	60,0	26,0	55
XVR NW 32 HS 1 1/4 VA	S	PN 160	38	Rosca 1.1/4" -11	M 52 x 2	49	20	62,0	26,0	55
XVR NW 32 HS VA	S	PN 160	38	Rosca 1.1/2" -11	M 52 x 2	55	22	64,0	26,0	55

Série: LL = muito leve L = leve S = pesada – PN = Pressão nominal PB = Pressão operacional máx. – Ø d2 = diâmetro externo do tubo

Variantes do produto

XVR	Conexão roscada, Aço
VR VA	Conexão roscada, Aço inoxidável

Apesar de uma verificação cuidadosa, não podemos excluir a possibilidade de erros e não assumimos qualquer responsabilidade pelos dados aqui contidos.