K-BKR STANDARD ZWEITEILIG VA

Ball valves

Características

Pressão operacional	max. 70 bar (depending on temperature and nominal size)
1.1/4" to 1.1/2"	20 °C: 70 bar, 60 °C: 55 bar, 100 °C: 35 bar, 150 °C: 6 bar, 180 °C: 4 bar, 200 °C: 0 bar
1/4" bis 1"	20 °C: 70 bar, 60 °C: 65 bar, 100 °C: 45 bar, 150 °C: 7 bar, 180 °C: 4 bar, 200 °C: 0 bar
2"	20 °C: 60 bar, 60 °C: 40 bar, 100 °C: 30 bar, 150 °C: 5 bar, 180 °C: 4 bar, 200 °C: 0 bar
Temperatura operacional	200 °C at 0 bar
Vedação	15 % RPTFE (glass fibre reinforced PTFE)
Manivela	Stainless steel 1.4301

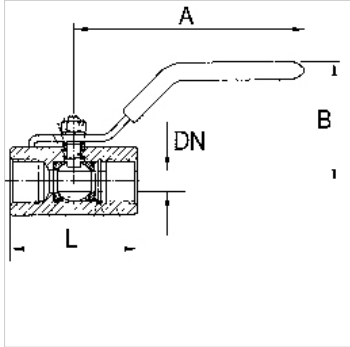

Nota

G thread acc. to DIN EN ISO 228-1, with ISO flange plate (acc. to ISO 5211)
Outras indicações a pedido.

Descrição

Full bore

Instruções de encomenda

For use on devices that have to be vented whenever they are turned off, either because of safety regulations or for technical reasons. The pneumatic devices are disconnected from the system and simultaneously vented each time they are shut off.

Informações adicionais

G thread acc. DIN EN ISO 228-1

Artigo

Descrição	DN	Rosca	A (mm)	B (mm)	L (mm)	Material
K- 07 30 00 01	8	G 1/4	102,0	56,0	52,0	Stainless steel 1.4401/1.4408
K- 07 30 00 02	10	G 3/8	102,0	56,0	52,0	Stainless steel 1.4401/1.4408
K- 07 30 00 03	15	G 1/2	123,0	65,0	58,0	Stainless steel 1.4401/1.4408
K- 07 30 00 04	20	G 3/4	123,0	68,0	67,0	Stainless steel 1.4401/1.4408
K- 07 30 00 05	25	G 1	153,0	79,0	78,0	Stainless steel 1.4401/1.4408
K- 07 30 00 06	32	G 1 1/4	153,0	84,0	90,0	Stainless steel 1.4401/1.4408
K- 07 30 00 07	40	G 1 1/2	183,0	93,0	104,0	Stainless steel 1.4401/1.4408
K- 07 30 00 08	50	G 2	183,0	99,0	127,0	Stainless steel 1.4401/1.4408

Apesar de uma verificação cuidadosa, não podemos excluir a possibilidade de erros e não assumimos qualquer responsabilidade pelos dados aqui contidos.