K-ABBLV VA 2

Stainless steel blow off safety valves, G 1/4

Características

Pressão operacional	0.5 - 60 bar
Temperatura operacional	max. 180 °C
Vedações	FKM
Mola	Stainless steel 1.4310
Carcaça	Stainless steel 1.4305



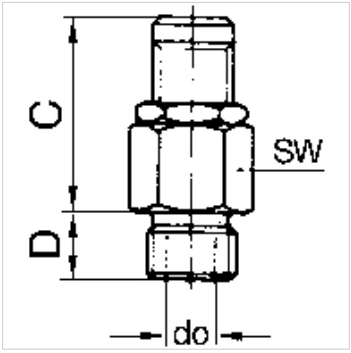

Nota

G thread acc. to DIN EN ISO 228-1, with ISO flange plate (acc. to ISO 5211)
Outras indicações a pedido.

Descrição

Manual adjustment of the blow-off pressure (lock nut).

Instruções de encomenda

For use on devices that have to be vented whenever they are turned off, either because of safety regulations or for technical reasons. The pneumatic devices are disconnected from the system and simultaneously vented each time they are shut off.

Informações adicionais

These blow-off valves can also be supplied with a fixed setting and a TÜV type test number. Please ask for an offer.

Artigo

Descrição	Rosca	Pressão de resposta	Potência de descarga	C (mm)	D (mm)	do (mm)	SW (mm)
K- 07 30 21 82	G 1/4	0.5 - 1.0 bar	to 50 l/min	27,0	7,0	3,0	16
K- 07 30 21 83	G 1/4	1.0 - 4.0 bar	to 200 l/min	27,0	7,0	3,0	16
K- 07 30 21 84	G 1/4	3.0 - 7.0 bar	to 350 l/min	27,0	7,0	3,0	16
K- 07 30 21 85	G 1/4	6.0 - 12.0 bar	to 650 l/min	27,0	7,0	3,0	16
K- 07 30 21 86	G 1/4	10.0 - 18.0 bar	to 870 l/min	27,0	7,0	3,0	16
K- 07 30 21 87	G 1/4	16.0 - 32.0 bar	to 1600 l/min	27,0	7,0	3,0	16
K- 07 30 21 88	G 1/4	30.0 - 60.0 bar	to 3000 l/min	27,0	7,0	3,0	16

Apesar de uma verificação cuidadosa, não podemos excluir a possibilidade de erros e não assumimos qualquer responsabilidade pelos dados aqui contidos.