K-PRAEZI DRUCKREGLER SELU

Precision pressure regulators

Características

Pressão de entrada	Max. 16 bar
Temperatura do fluido	max. 60 °C
Temperatura ambiente	Max. 60 °C
Fluidos	Micro-filtered, unoiled compressed air (0.01 µm)
Conexão manômetro	G 1/4
Conexão de purga	G 3/8 (for mounting a silencer)
Material de vedação	NBR
Carcaça	Die-cast zinc
Consumo de ar próprio	1.5 - 6 l/min, depending on input pressure and control range



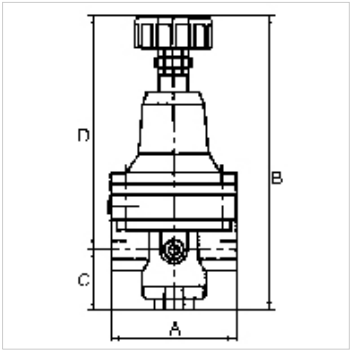

Nota

The given flow rates are based on the following parameters: 1200 l/min: P1: 5 bar, P2: 3 bar, Δp ≤ 0.1 bar
1400 l/min: P1: 7 bar, P2: 5 bar, Δp ≤ 0.1 bar
1500 l/min: P1: 10 bar, P2: 7 bar, Δp ≤ 0.1 bar. Wear parts kit not supplied! Pressure regulator may only be opened in the factory!
Outras indicações a pedido.

Descrição

With high flow rate and large secondary relief port. Diaphragm pressure regulators with large secondary relief port for applications requiring an extremely accurate working pressure, especially at high flow rates.

Informações adicionais

on Art. K-07250721: Max. inlet pressure 300 bar. Other cylinder pressure regulators available on request.
1500 l/min: P1: 10 bar, P2: 7 bar, Δp ≤ 0.1 bar.

Artigo

Descrição	Rosca	Faixa de regulagem	Fluxo (L/min)	A (mm)	C (mm)	D (mm)
K- 07 25 09 28	G 1/4	0.05 - 3 bar	700	82,0	43,5	159,0
K- 07 25 09 29	G 1/4	0.05 - 7 bar	1500	82,0	43,5	159,0
K- 07 25 09 30	G 3/8	0.05 - 3 bar	3000	82,0	43,5	159,0
K- 07 25 09 31	G 3/8	0.05 - 7 bar	5500	82,0	43,5	159,0
K- 07 25 09 32	G 1/2	0.05 - 3 bar	3000	82,0	43,5	159,0
K- 07 25 09 33	G 1/2	0.05 - 5 bar	4500	82,0	43,5	159,0
K- 07 25 09 34	G 1/2	0.05 - 7 bar	5500	82,0	43,5	159,0

Acessório para

K-HALTERBAUSATZ STANDARD	Holder
K-KM MS	Hexagonal lock nuts, brass
K-SCHALLDAEPFER VYON	Vyon silencers
K-FILTERELEMENT	Filter element
K-XV AGM 2	Double nipples, parallel male thread

Apesar de uma verificação cuidadosa, não podemos excluir a possibilidade de erros e não assumimos qualquer responsabilidade pelos dados aqui contidos.