# K-DRG MULTIFIX MINI

Pressure regulators

HANSA-FLEX

## Características

| | |
|---|---|
| **Pressão de entrada** | Max. 16 bar |
| **Temperatura do fluido** | max. 60 °C |
| **Temperatura ambiente** | Max. 60 °C |
| **Material de vedação** | NBR |
| **Tampa da mola** | POM-brass |
| **Carcaça** | Die-cast zinc |
| **Medição do valor de fluxo** | At P1 = 8 bar, P2 = 6 bar and pressure drop Δp = 1 bar |



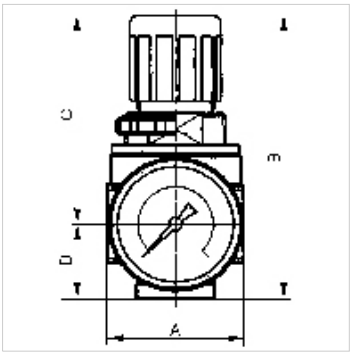


## Nota

Outras indicações a pedido.

## Descrição

Reversible diaphragm pressure regulators, independent of inlet pressure, with self-relieving design. The pressure setting can be locked by pushing the button down.

## Instruções de encomenda

Lockable pressure regulators: K-07250001 and K-07250007 (prices on request). If several devices in the »multifix-mini« Series are assembled together, the maximum working pressure is 12 bar.

## Artigo

| Descrição | Rosca | Faixa de regulagem | Fluxo (L/min) | A (mm) | B | C (mm) | D (mm) | DN | Tamanho |
|---|---|---|---|---|---|---|---|---|---|
| **K- 07 25 00 03** | G 1/8 | 0.1 - 3 bar | 1100 | 40,0 | 85,0 mm | 63,0 | 22,0 | 5 | 0 |
| **K- 07 25 00 04** | G 1/8 | 0.2 - 6 bar | 1100 | 40,0 | 85,0 mm | 63,0 | 22,0 | 5 | 0 |
| **K- 07 25 00 01** | G 1/8 | 0.5 - 10 bar | 1100 | 40,0 | 85,0 mm | 63,0 | 22,0 | 5 | 0 |
| **K- 07 25 00 02** | G 1/8 | 0.5 - 16 bar | 1100 | 40,0 | 85,0 mm | 63,0 | 22,0 | 5 | 0 |
| **K- 07 25 00 05** | G 1/4 | 0.1 - 3 bar | 1100 | 40,0 | 85,0 mm | 63,0 | 22,0 | 5 | 0 |
| **K- 07 25 00 06** | G 1/4 | 0.2 - 6 bar | 1100 | 40,0 | 85,0 mm | 63,0 | 22,0 | 5 | 0 |
| **K- 07 25 00 07** | G 1/4 | 0.5 - 10 bar | 1100 | 40,0 | 85,0 mm | 63,0 | 22,0 | 5 | 0 |

## Acessório para

| | |
|---|---|
| **K-HALTERBAUSATZ** | Holder |
| **K-SCHALTTAFELMUTTER** | Nut |
| **K-KOPPELPAKET MEHR** | Coupling packet |
| **K-VERSCHLEI-SATZ** | Set of wearing parts |

*Apesar de uma verificação cuidadosa, não podemos excluir a possibilidade de erros e não assumimos qualquer responsabilidade pelos dados aqui contidos.*