K-DRG DRVS VARIOBLOC

Pressure regulators with pressure supply at both ends

Características

Pressão de entrada	Max. 25 bar
Temperatura do fluido	max. 50 °C
Temperatura ambiente	Max. 50 °C
Material de vedação	NBR
Tampa da mola	POM-brass
Carcaça	Die-cast zinc
Medição do valor de fluxo	At P1 = 10 bar, P2 = 6 bar and pressure drop Δp = 1 bar



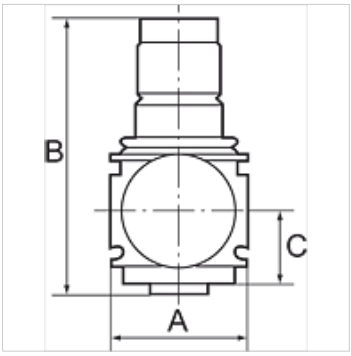

Nota

Outras indicações a pedido.

Descrição

Diaphragm pressure regulators with self-relieving design for mounting side by side. The pressure setting can be locked by pushing the knob down.
By assembling two or more controllers together, it is possible to supply several working air circuits with different output pressures via a single supply line.

Instruções de encomenda

Pressure regulators are also available in lockable version. Please ask for more information.

Artigo

Descrição	Rosca	Faixa de regulagem	Fluxo (L/min)	A (mm)	B	C (mm)
K- 07 25 04 33	G 1/4	0.5 - 6 bar	1800	48,0	98,0 mm	26,0
K- 07 25 04 34	G 1/4	0.5 - 10 bar	1800	48,0	98,0 mm	26,0
K- 07 25 04 35	G 1/4	0.5 - 16 bar	1800	48,0	98,0 mm	26,0
K- 07 25 04 36	G 3/8	0.5 - 6 bar	1800	48,0	98,0 mm	26,0
K- 07 25 04 37	G 3/8	0.5 - 10 bar	1800	48,0	98,0 mm	26,0
K- 07 25 04 38	G 3/8	0.5 - 16 bar	1800	48,0	98,0 mm	26,0

Acessório para

K-VERSCHLEI-SATZ VARIOBLOC	Set of wearing parts

Apesar de uma verificação cuidadosa, não podemos excluir a possibilidade de erros e não assumimos qualquer responsabilidade pelos dados aqui contidos.