K-ZFL ABSP-KLAPPEN DOPPEL

Butterfly valves, with double-acting actuator, min. pilot pressure 5 bar

HANSA FLEX

Características

Tipo	Pneumatic actuators, in double- or single acting version
Pressão operacional	Max. 16 bar
Temperatura operacional	-15 °C to +120 °C
Fluidos	Water / steam, salt water, salt water, ester, ketone, alkali, caustic soda, sodium hydroxide. Not recommended for hydrocarbons
Pressão de controle	5.5 bar
Adaptador da válvula	Supplied as standard, operated by a 3/2- or 5/2-way valve
Ângulo rotativo	90 °
Acionamento	aluminium eloxed
Vedação de acionamento	NBR
Carcaça	Grey cast iron GG25 epoxy resin coated, RAL 5015
Vedação	EPDM
Eixo	SS416
Vedação do eixo	EPDM
Acionamento	



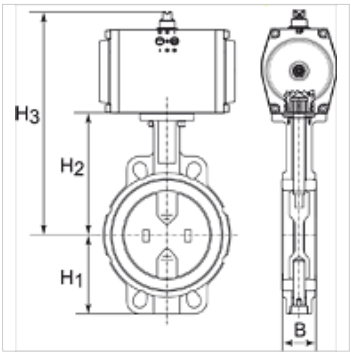

Nota

Outras indicações a pedido.

Artigo

Descrição	Disco	DN	B (mm)	H1 (mm)	H2 (mm)	H3 (mm)	L (mm)
K- 07 30 03 28	Stainless Steel CF8M/1.4404	40	38,0	68,0	108,0	212,0	94,0
K- 07 30 03 29	Stainless Steel CF8M/1.4404	50	47,0	71,0	143,0	247,0	100,0
K- 07 30 03 30	Stainless Steel CF8M/1.4404	65	49,0	78,0	155,0	259,0	115,0
K- 07 30 03 31	Stainless Steel CF8M/1.4404	80	47,0	89,0	162,0	280,0	127,0
K- 07 30 03 32	Stainless Steel CF8M/1.4404	100	56,0	102,0	178,0	308,0	163,0
K- 07 30 03 33	Stainless Steel CF8M/1.4404	125	59,0	123,0	191,0	321,0	190,0
K- 07 30 03 35	Stainless Steel CF8M/1.4404	150	59,0	138,0	205,0	352,0	216,0

Apesar de uma verificação cuidadosa, não podemos excluir a possibilidade de erros e não assumimos qualquer responsabilidade pelos dados aqui contidos.