K-WTEH 2-TLG PC SCHU VARIOBLOC

Service units, 2-piece with polycarbonate bowl and bowl guard

Características

Pressão de entrada	Max. 16 bar (polycarbonate bowl), Max. 20 bar (metal bowl)
Temperatura do fluido	max. 50 °C
Temperatura ambiente	Max. 50 °C (polycarbonate bowl), Max. 80 °C (metal bowl)
Dimensão dos poros no elemento filtrante	40 µm
Material de vedação	NBR
Tampa da mola	POM
Carcaça	Die-cast zinc
Membrana	NBR
Acessório para gotejamento	PA
Drain valve	Manual
Medição do valor de fluxo	At P1 = 10 bar, P2 = 6 bar and pressure drop Δp = 1 bar



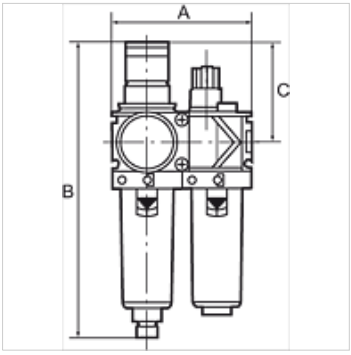

Nota

Outras indicações a pedido.

Descrição

Two or three-piece service units consisting of a reversible diaphragm pressure regulator, independent of inlet pressure, with self-relieving design, combined with a centrifugal separator and a proportional lubricator. Approved series in modern industrial design, with the following key benefits: Simple handling, Convenient modular assembly thanks to innovative fasteners, Excellent flow values.

Instruções de encomenda

Service units are also available with bowl guard or metal bowl. Service units are also available in other control ranges (0.5 - 6 bar and 0.5 - 16 bar) and in lockable version. Please ask for more information.

Informações adicionais

Service units are also available with bowl guard or metal bowl. Service units are also available in other control ranges.

Artigo

Descrição	Rosca	Faixa de regulagem	Fluxo (L/min)	A (mm)	B	C (mm)
K- 07 25 22 81	G 1/4	0.5 - 10 bar	1500	96,0	203,0 mm	68,0
K- 07 25 22 80	G 3/8	0.5 - 10 bar	1800	96,0	203,0 mm	68,0
K- 07 25 22 79	G 1/2	0.5 - 10 bar	3400	140,0	273,0 mm	98,0
K- 07 25 22 78	G 3/4	0.5 - 10 bar	5000	140,0	273,0 mm	98,0
K- 07 25 22 77	G 1	0.5 - 10 bar	5000	194,0	273,0 mm	98,0

Apesar de uma verificação cuidadosa, não podemos excluir a possibilidade de erros e não assumimos qualquer responsabilidade pelos dados aqui contidos.