# AOH VA
## Îmbinare filetată de reducție

HANSA-FLEX

### Caracteristici

| | |
|---|---|
| **Racord 1** | Filet metric de piuliță |
| **Formă de etanșare 1** | Con exterior 24° cu inel O |
| **Racord 2** | Filet metric exterior cilindric |
| **Formă de etanșare 2** | Con interior 24° |
| **Tip constructiv** | Îmbinare filetată de reducție |
| **Forma constructivă** | drept |
| **Standard** | DIN 2353<br>ISO 8434-1 |
| **Set de livrare** | Știuț cu piuliță olandeză și inel de tăiere |
| **Material** | oțel inoxidabil |



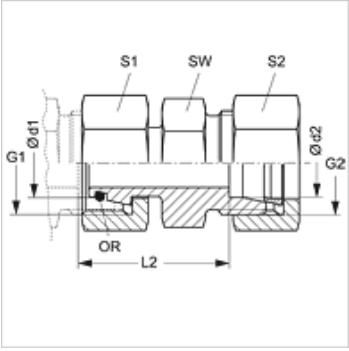


### Indicații referitoare comandă

NBR sigilii
FPM (Viton) la cerere

### Articol

| Denumire | Seria | Presiune de lucru bar | Ø d1 (mm) | Ø d2 (mm) | G1 | G2 | L2 (mm) | SW (mm) | S1 | S2 | Inel O |
|---|---|---|---|---|---|---|---|---|---|---|---|
| **AOH NW 04 L VA** | L | PN 315 | 6 | 6 | M 12 x 1,5 | M 12 x 1,5 | 36,0 | 12 | 14 | 14 | 4,0 x 1,5 |
| **AOH NW 06 L 04 VA** | L | PN 315 | 8 | 6 | M 14 x 1,5 | M 12 x 1,5 | 24,5 | 12 | 17 | 14 | 6,0 x 1,5 |
| **AOH NW 06 L VA** | L | PN 315 | 8 | 8 | M 14 x 1,5 | M 14 x 1,5 | 36,0 | 14 | 17 | 17 | 6,0 x 1,5 |
| **AOH NW 08 L 04 VA** | L | PN 315 | 10 | 6 | M 16 x 1,5 | M 12 x 1,5 | 25,0 | 14 | 19 | 14 | 7,5 x 1,5 |
| **AOH NW 08 L 06 VA** | L | PN 315 | 10 | 8 | M 16 x 1,5 | M 14 x 1,5 | 25,0 | 14 | 19 | 17 | 7,5 x 1,5 |
| **AOH NW 08 L VA** | L | PN 315 | 10 | 10 | M 16 x 1,5 | M 16 x 1,5 | 36,0 | 17 | 19 | 19 | 7,5 x 1,5 |
| **AOH NW 10 L 04 VA** | L | PN 315 | 12 | 6 | M 18 x 1,5 | M 12 x 1,5 | 26,5 | 17 | 22 | 14 | 9,0 x 1,5 |
| **AOH NW 10 L 06 VA** | L | PN 315 | 12 | 8 | M 18 x 1,5 | M 14 x 1,5 | 26,5 | 17 | 22 | 17 | 9,0 x 1,5 |
| **AOH NW 10 L 08 VA** | L | PN 315 | 12 | 10 | M 18 x 1,5 | M 16 x 1,5 | 27,5 | 17 | 22 | 19 | 9,0 x 1,5 |
| **AOH NW 10 L VA** | L | PN 315 | 12 | 12 | M 18 x 1,5 | M 18 x 1,5 | 36,0 | 19 | 22 | 22 | 9,0 x 1,5 |
| **AOH NW 13 L 04 VA** | L | PN 315 | 15 | 6 | M 22 x 1,5 | M 12 x 1,5 | 28,5 | 19 | 27 | 14 | 12,0 x 2,0 |
| **AOH NW 13 L 06 VA** | L | PN 315 | 15 | 8 | M 22 x 1,5 | M 14 x 1,5 | 28,5 | 19 | 27 | 17 | 12,0 x 2,0 |
| **AOH NW 13 L 08 VA** | L | PN 315 | 15 | 10 | M 22 x 1,5 | M 16 x 1,5 | 29,5 | 19 | 27 | 19 | 12,0 x 2,0 |
| **AOH NW 13 L 10 VA** | L | PN 315 | 12 | 15 | M 22 x 1,5 | M 16 x 1,5 | 29,5 | 19 | 27 | 22 | 12,0 x 2,0 |
| **AOH NW 13 L VA** | L | PN 315 | 15 | 15 | M 22 x 1,5 | M 22 x 1,5 | 36,0 | 24 | 27 | 27 | 12,0 x 2,0 |
| **AOH NW 16 L 04 VA** | L | PN 315 | 18 | 6 | M 26 x 1,5 | M 12 x 1,5 | 29,5 | 24 | 32 | 14 | 15,0 x 2,0 |
| **AOH NW 16 L 06 VA** | L | PN 315 | 18 | 8 | M 26 x 1,5 | M 14 x 1,5 | 29,5 | 24 | 32 | 17 | 15,0 x 2,0 |
| **AOH NW 16 L 08 VA** | L | PN 315 | 18 | 10 | M 26 x 1,5 | M 16 x 1,5 | 30,5 | 24 | 32 | 19 | 15,0 x 2,0 |
| **AOH NW 16 L 10 VA** | L | PN 315 | 18 | 12 | M 26 x 1,5 | M 18 x 1,5 | 30,5 | 24 | 32 | 22 | 15,0 x 2,0 |
| **AOH NW 16 L 13 VA** | L | PN 315 | 18 | 15 | M 26 x 1,5 | M 22 x 1,5 | 31,5 | 24 | 32 | 27 | 15,0 x 2,0 |
| **AOH NW 16 L VA** | L | PN 315 | 18 | 18 | M 26 x 1,5 | M 26 x 1,5 | 36,0 | 27 | 32 | 32 | 15,0 x 2,0 |
| **AOH NW 20 L 04 VA** | L | PN 160 | 22 | 6 | M 30 x 2 | M 12 x 1,5 | 32,0 | 27 | 36 | 14 | 20,0 x 2,0 |
| **AOH NW 20 L 06 VA** | L | PN 160 | 22 | 8 | M 30 x 2 | M 14 x 1,5 | 32,0 | 27 | 36 | 17 | 20,0 x 2,0 |
| **AOH NW 20 L 08 VA** | L | PN 160 | 22 | 10 | M 30 x 2 | M 16 x 1,5 | 33,0 | 27 | 36 | 19 | 20,0 x 2,0 |
| **AOH NW 20 L 10 VA** | L | PN 160 | 22 | 12 | M 30 x 2 | M 18 x 1,5 | 33,0 | 27 | 36 | 22 | 20,0 x 2,0 |
| **AOH NW 20 L 13 VA** | L | PN 160 | 22 | 15 | M 30 x 2 | M 22 x 1,5 | 34,0 | 27 | 36 | 27 | 20,0 x 2,0 |
| **AOH NW 20 L 16 VA** | L | PN 160 | 22 | 18 | M 30 x 2 | M 26 x 1,5 | 33,5 | 27 | 36 | 32 | 20,0 x 2,0 |
| **AOH NW 20 L VA** | L | PN 160 | 22 | 22 | M 30 x 2 | M 30 x 2 | 40,0 | 32 | 36 | 36 | 20,0 x 2,0 |
| **AOH NW 25 L 04 VA** | L | PN 160 | 28 | 6 | M 36 x 2 | M 12 x 1,5 | 34,0 | 32 | 41 | 14 | 26,0 x 2,0 |
| **AOH NW 25 L 06 VA** | L | PN 160 | 28 | 8 | M 36 x 2 | M 14 x 1,5 | 34,0 | 32 | 41 | 17 | 26,0 x 2,0 |
| **AOH NW 25 L 08 VA** | L | PN 160 | 28 | 10 | M 36 x 2 | M 16 x 1,5 | 35,0 | 32 | 41 | 19 | 26,0 x 2,0 |
| **AOH NW 25 L 10 VA** | L | PN 160 | 28 | 12 | M 36 x 2 | M 18 x 1,5 | 35,0 | 32 | 41 | 22 | 26,0 x 2,0 |
| **AOH NW 25 L 13 VA** | L | PN 160 | 28 | 15 | M 36 x 2 | M 22 x 1,5 | 36,0 | 32 | 41 | 27 | 26,0 x 2,0 |
| **AOH NW 25 L 16 VA** | L | PN 160 | 28 | 18 | M 36 x 2 | M 26 x 1,5 | 35,5 | 32 | 41 | 32 | 26,0 x 2,0 |
| **AOH NW 25 L 20 VA** | L | PN 160 | 28 | 22 | M 36 x 2 | M 30 x 2 | 37,5 | 32 | 41 | 36 | 26,0 x 2,0 |
| **AOH NW 25 L VA** | L | PN 160 | 28 | 28 | M 36 x 2 | M 36 x 2 | 50,0 | 46 | 50 | 50 | 26,0 x 2,0 |
| **AOH NW 32 L 04 VA** | L | PN 160 | 35 | 6 | M 12 x 1,5 | M 45 x 2 | 38,5 | 41 | 50 | 14 | 32,0 x 2,5 |
| **AOH NW 32 L 06 VA** | L | PN 160 | 35 | 8 | M 45 x 2 | M 14 x 1,5 | 38,5 | 41 | 50 | 17 | 32,0 x 2,5 |
| **AOH NW 32 L 08 VA** | L | PN 160 | 35 | 10 | M 45 x 2 | M 16 x 1,5 | 39,5 | 41 | 50 | 19 | 32,0 x 2,5 |
| **AOH NW 32 L 10 VA** | L | PN 160 | 35 | 12 | M 45 x 2 | M 18 x 1,5 | 39,5 | 41 | 50 | 22 | 32,0 x 2,5 |
| **AOH NW 32 L 13 VA** | L | PN 160 | 35 | 15 | M 45 x 2 | M 22 x 1,5 | 39,5 | 41 | 50 | 27 | 32,0 x 2,5 |
| **AOH NW 32 L 16 VA** | L | PN 160 | 18 | 35 | M 45 x 2 | M 26 x 1,5 | 39,5 | 41 | 50 | 32 | 32,0 x 2,5 |
| **AOH NW 32 L 20 VA** | L | PN 160 | 35 | 22 | M 45 x 2 | M 30 x 2 | 41,5 | 41 | 50 | 36 | 32,0 x 2,5 |
| **AOH NW 32 L 25 VA** | L | PN 160 | 35 | 28 | M 45 x 2 | M 36 x 2 | 41,5 | 41 | 50 | 41 | 32,0 x 2,5 |

*În pofida controlului minuțios nu putem exclude eventualele informații eronate și nu garantăm pentru datele cuprinse.*

# AOH VA
## Îmbinare filetată de reducție

HANSA-FLEX

**Articol**

| Denumire | Seria | Presiune de lucru bar | Ø d1 (mm) | Ø d2 (mm) | G1 | G2 | L2 (mm) | SW (mm) | S1 | S2 | Inel O |
|---|---|---|---|---|---|---|---|---|---|---|---|
| **AOH NW 32 L VA** | L | PN 160 | 35 | 35 | M 45 x 2 | M 45 x 2 | 50,0 | 46 | 50 | 50 | 32,0 x 2,5 |
| **AOH NW 40 L 04 VA** | L | PN 160 | 42 | 6 | M 52 x 2 | M 12 x 1,5 | 41,0 | 46 | 60 | 14 | 38,0 x 2,5 |
| **AOH NW 40 L 06 VA** | L | PN 160 | 42 | 8 | M 52 x 2 | M 14 x 1,5 | 41,0 | 46 | 60 | 17 | 38,0 x 2,5 |
| **AOH NW 40 L 08 VA** | L | PN 160 | 42 | 10 | M 52 x 2 | M 16 x 1,5 | 42,0 | 46 | 60 | 19 | 38,0 x 2,5 |
| **AOH NW 40 L 10 VA** | L | PN 160 | 42 | 12 | M 52 x 2 | M 18 x 1,5 | 42,0 | 46 | 60 | 22 | 38,0 x 2,5 |
| **AOH NW 40 L 13 VA** | L | PN 160 | 42 | 15 | M 52 x 2 | M 22 x 1,5 | 43,0 | 46 | 60 | 27 | 38,0 x 2,5 |
| **AOH NW 40 L 16 VA** | L | PN 160 | 42 | 18 | M 52 x 2 | M 26 x 1,5 | 42,0 | 50 | 60 | 32 | 38,0 x 2,5 |
| **AOH NW 40 L 20 VA** | L | PN 160 | 42 | 22 | M 52 x 2 | M 30 x 2 | 44,0 | 50 | 60 | 36 | 38,0 x 2,5 |
| **AOH NW 40 L 25 VA** | L | PN 160 | 42 | 28 | M 52 x 2 | M 36 x 2 | 44,0 | 50 | 60 | 41 | 38,0 x 2,5 |
| **AOH NW 40 L 32 VA** | L | PN 160 | 42 | 35 | M 52 x 2 | M 45 x 2 | 43,0 | 50 | 60 | 50 | 38,0 x 2,5 |
| **AOH NW 40 L VA** | L | PN 160 | 42 | 42 | M 52 x 2 | M 52 x 2 | 60,0 | 55 | 60 | 60 | 38,0 x 2,5 |
| | | | | | | | | | | | |
| **AOH NW 03 S VA** | S | PN 630 | 6 | 6 | M 14 x 1,5 | M 14 x 1,5 | 36,0 | 14 | 17 | 17 | 4,5 x 1,5 |
| **AOH NW 04 S 03 VA** | S | PN 630 | 8 | 6 | M 16 x 1,5 | M 14 x 1,5 | 28,0 | 14 | 19 | 17 | 6,0 x 1,5 |
| **AOH NW 04 S VA** | S | PN 630 | 8 | 8 | M 16 x 1,5 | M 16 x 1,5 | 36,0 | 17 | 19 | 19 | 6,0 x 1,5 |
| **AOH NW 06 S 03 VA** | S | PN 630 | 10 | 6 | M 18 x 1,5 | M 14 x 1,5 | 29,5 | 17 | 22 | 17 | 7,5 x 1,5 |
| **AOH NW 06 S 04 VA** | S | PN 630 | 10 | 8 | M 18 x 1,5 | M 16 x 1,5 | 29,5 | 17 | 22 | 19 | 7,5 x 1,5 |
| **AOH NW 06 S VA** | S | PN 630 | 10 | 10 | M 18 x 1,5 | M 18 x 1,5 | 36,0 | 19 | 22 | 22 | 7,5 x 1,5 |
| **AOH NW 08 S 03 VA** | S | PN 630 | 12 | 6 | M 20 x 1,5 | M 14 x 1,5 | 30,0 | 17 | 24 | 17 | 9,0 x 1,5 |
| **AOH NW 08 S 04 VA** | S | PN 630 | 12 | 8 | M 20 x 1,5 | M 16 x 1,5 | 30,0 | 17 | 24 | 19 | 9,0 x 1,5 |
| **AOH NW 08 S 06 VA** | S | PN 630 | 12 | 10 | M 20 x 1,5 | M 18 x 1,5 | 30,5 | 19 | 24 | 22 | 9,0 x 1,5 |
| **AOH NW 08 S VA** | S | PN 630 | 12 | 12 | M 20 x 1,5 | M 20 x 1,5 | 36,0 | 22 | 24 | 24 | 9,0 x 1,5 |
| **AOH NW 10 S 03 VA** | S | PN 630 | 14 | 6 | M 22 x 1,5 | M 14 x 1,5 | 33,0 | 19 | 27 | 17 | 10,0 x 2,0 |
| **AOH NW 10 S 04 VA** | S | PN 630 | 14 | 8 | M 22 x 1,5 | M 16 x 1,5 | 33,0 | 19 | 27 | 19 | 10,0 x 2,0 |
| **AOH NW 10 S 06 VA** | S | PN 630 | 14 | 10 | M 22 x 1,5 | M 18 x 1,5 | 32,5 | 19 | 27 | 22 | 10,0 x 2,0 |
| **AOH NW 10 S 08 VA** | S | PN 630 | 14 | 12 | M 22 x 1,5 | M 20 x 1,5 | 32,5 | 22 | 27 | 24 | 10,0 x 2,0 |
| **AOH NW 10 S VA** | S | PN 630 | 14 | 14 | M 22 x 1,5 | M 22 x 1,5 | 40,0 | 24 | 27 | 27 | 10,0 x 2,0 |
| **AOH NW 13 S 03 VA** | S | PN 400 | 16 | 6 | M 24 x 1,5 | M 14 x 1,5 | 34,0 | 22 | 30 | 17 | 12,0 x 2,0 |
| **AOH NW 13 S 04 VA** | S | PN 400 | 16 | 8 | M 24 x 1,5 | M 16 x 1,5 | 34,0 | 22 | 30 | 19 | 12,0 x 2,0 |
| **AOH NW 13 S 06 VA** | S | PN 400 | 16 | 10 | M 24 x 1,5 | M 18 x 1,5 | 33,5 | 22 | 30 | 22 | 12,0 x 2,0 |
| **AOH NW 13 S 08 VA** | S | PN 400 | 16 | 12 | M 24 x 1,5 | M 20 x 1,5 | 33,5 | 22 | 30 | 24 | 12,0 x 2,0 |
| **AOH NW 13 S 10 VA** | S | PN 400 | 16 | 14 | M 24 x 1,5 | M 22 x 1,5 | 35,5 | 24 | 30 | 27 | 12,0 x 2,0 |
| **AOH NW 13 S VA** | S | PN 400 | 16 | 16 | M 24 x 1,5 | M 24 x 1,5 | 40,0 | 27 | 30 | 30 | 12,0 x 2,0 |
| **AOH NW 16 S 03 VA** | S | PN 400 | 20 | 6 | M 30 x 2 | M 14 x 1,5 | 39,0 | 27 | 36 | 17 | 16,3 x 2,4 |
| **AOH NW 16 S 04 VA** | S | PN 400 | 20 | 8 | M 30 x 2 | M 16 x 1,5 | 39,0 | 27 | 36 | 19 | 16,3 x 2,4 |
| **AOH NW 16 S 06 VA** | S | PN 400 | 20 | 10 | M 30 x 2 | M 18 x 1,5 | 38,5 | 27 | 36 | 22 | 16,3 x 2,4 |
| **AOH NW 16 S 08 VA** | S | PN 400 | 20 | 12 | M 30 x 2 | M 20 x 1,5 | 38,5 | 27 | 36 | 24 | 16,3 x 2,4 |
| **AOH NW 16 S 10 VA** | S | PN 400 | 20 | 14 | M 30 x 2 | M 22 x 1,5 | 40,0 | 27 | 36 | 27 | 16,3 x 2,4 |
| **AOH NW 16 S 13 VA** | S | PN 400 | 20 | 16 | M 30 x 2 | M 24 x 1,5 | 39,5 | 27 | 36 | 30 | 16,3 x 2,4 |
| **AOH NW 16 S VA** | S | PN 400 | 20 | 20 | M 30 x 2 | M 30 x 2 | 46,0 | 32 | 36 | 36 | 16,3 x 2,4 |
| **AOH NW 20 S 03 VA** | S | PN 400 | 25 | 6 | M 36 x 2 | M 14 x 1,5 | 41,5 | 32 | 46 | 17 | 20,3 x 2,4 |
| **AOH NW 20 S 04 VA** | S | PN 400 | 25 | 8 | M 36 x 2 | M 16 x 1,5 | 41,5 | 32 | 46 | 19 | 20,3 x 2,4 |
| **AOH NW 20 S 06 VA** | S | PN 400 | 25 | 10 | M 36 x 2 | M 18 x 1,5 | 41,0 | 32 | 46 | 22 | 20,3 x 2,4 |
| **AOH NW 20 S 08 VA** | S | PN 400 | 25 | 12 | M 36 x 2 | M 20 x 1,5 | 41,0 | 32 | 46 | 24 | 20,3 x 2,4 |
| **AOH NW 20 S 10 VA** | S | PN 400 | 25 | 14 | M 36 x 2 | M 22 x 1,5 | 42,5 | 32 | 46 | 27 | 20,3 x 2,4 |
| **AOH NW 20 S 13 VA** | S | PN 400 | 25 | 16 | M 36 x 2 | M 24 x 1,5 | 42,0 | 32 | 46 | 30 | 20,3 x 2,4 |
| **AOH NW 20 S 16 VA** | S | PN 400 | 25 | 20 | M 36 x 2 | M 30 x 2 | 42,0 | 32 | 46 | 36 | 20,3 x 2,4 |
| **AOH NW 20 S VA** | S | PN 400 | 25 | 25 | M 36 x 2 | M 36 x 2 | 50,0 | 41 | 46 | 46 | 20,3 x 2,4 |
| **AOH NW 25 S 03 VA** | S | PN 400 | 30 | 6 | M 42 x 2 | M 14 x 1,5 | 44,5 | 36 | 50 | 17 | 25,3 x 2,4 |
| **AOH NW 25 S 04 VA** | S | PN 400 | 30 | 8 | M 42 x 2 | M 16 x 1,5 | 46,0 | 41 | 50 | 19 | 25,3 x 2,4 |
| **AOH NW 25 S 06 VA** | S | PN 400 | 30 | 10 | M 42 x 2 | M 18 x 1,5 | 45,5 | 41 | 50 | 22 | 25,3 x 2,4 |
| **AOH NW 25 S 08 VA** | S | PN 400 | 30 | 12 | M 42 x 2 | M 20 x 1,5 | 45,5 | 41 | 50 | 24 | 25,3 x 2,4 |
| **AOH NW 25 S 10 VA** | S | PN 400 | 30 | 14 | M 42 x 2 | M 22 x 1,5 | 47,0 | 41 | 50 | 27 | 25,3 x 2,4 |
| **AOH NW 25 S 13 VA** | S | PN 400 | 30 | 16 | M 42 x 2 | M 24 x 1,5 | 46,5 | 41 | 50 | 30 | 25,3 x 2,4 |
| **AOH NW 25 S 16 VA** | S | PN 400 | 30 | 20 | M 42 x 2 | M 30 x 2 | 46,5 | 41 | 50 | 36 | 25,3 x 2,4 |
| **AOH NW 25 S 20 VA** | S | PN 400 | 30 | 25 | M 42 x 2 | M 36 x 2 | 47,0 | 41 | 50 | 46 | 25,3 x 2,4 |
| **AOH NW 25 S VA** | S | PN 400 | 30 | 30 | M 42 x 2 | M 42 x 2 | 56,0 | 46 | 50 | 50 | 25,3 x 2,4 |
| **AOH NW 32 S 03 VA** | S | PN 315 | 38 | 6 | M 52 x 2 | M 14 x 1,5 | 48,5 | 46 | 60 | 17 | 33,3 x 2,4 |
| **AOH NW 32 S 04 VA** | S | PN 315 | 38 | 8 | M 52 x 2 | M 16 x 1,5 | 48,5 | 46 | 60 | 19 | 33,3 x 2,4 |
| **AOH NW 32 S 06 VA** | S | PN 315 | 38 | 10 | M 52 x 2 | M 18 x 1,5 | 48,0 | 46 | 60 | 22 | 33,3 x 2,4 |
| **AOH NW 32 S 08 VA** | S | PN 315 | 38 | 12 | M 52 x 2 | M 20 x 1,5 | 50,0 | 50 | 60 | 24 | 33,3 x 2,4 |
| **AOH NW 32 S 10 VA** | S | PN 315 | 38 | 14 | M 52 x 2 | M 22 x 1,5 | 51,5 | 50 | 60 | 27 | 33,3 x 2,4 |
| **AOH NW 32 S 13 VA** | S | PN 315 | 38 | 16 | M 24 x 1,5 | M 52 x 2 | 51,0 | 50 | 60 | 30 | 33,3 x 2,4 |

# AOH VA
Îmbinare filetată de reducție

## Articol

| Denumire | Seria | Presiune de lucru bar | Ø d1 (mm) | Ø d2 (mm) | G1 | G2 | L2 (mm) | SW (mm) | S1 | S2 | Inel O |
|---|---|---|---|---|---|---|---|---|---|---|---|
| **AOH NW 32 S 16 VA** | S | PN 315 | 38 | 20 | M 52 x 2 | M 30 x 2 | 51,0 | 50 | 60 | 36 | 33,3 x 2,4 |
| **AOH NW 32 S 20 VA** | S | PN 315 | 38 | 25 | M 52 x 2 | M 36 x 2 | 51,5 | 50 | 60 | 46 | 33,3 x 2,4 |
| **AOH NW 32 S 25 VA** | S | PN 315 | 38 | 30 | M 52 x 2 | M 42 x 2 | 52,0 | 50 | 60 | 50 | 33,3 x 2,4 |
| **AOH NW 32 S VA** | S | PN 315 | 38 | 38 | M 52 x 2 | M 52 x 2 | 60,0 | 55 | 60 | 60 | 33,3 x 2,4 |

Seria: LL = foarte ușoară L = ușoară S = grea – PN = Presiunea nominală PB = Presiunea max. de lucru – Ø d1 = diametru exterior țeavă – Ø d2 = diametru exterior țeavă

## Variante produs

| | |
|---|---|
| **AOH** | Reducție filetată, Știft cu piuliță olandeză și inel de tăiere |
| **XAOH VA** | Reducție filetată, Știft (fără piuliță olandeză și inel de tăiere) |

*În pofida controlului minuțios nu putem exclude eventualele informații eronate și nu garantăm pentru datele cuprinse.*