XRT
Reducție filetată, formă T

HANSA-FLEX

Caracteristici

Racord 1 - 3	Filet metric exterior cilindric
Formă de etanșare 1 - 3	Con interior 24°
Tip constructiv	Îmbinare filetată de reducție
Forma constructivă	Formă de T
Standard	ISO 8434-1
Set de livrare	Știuț (fără piuliță olandeză și inel de tăiere)
Material	Oțel
Protecția suprafeței	acoperire galvanică



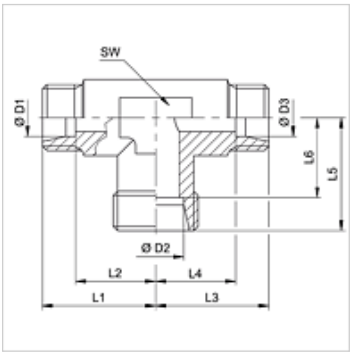

Indicație

Indicațiile privind montajul, asamblarea, încărcarea cu presiune și temperaturile de regim admisibile se găsesc în informațiile tehnice referitoare la îmbinările filetate pentru țevi.

Articol

Denumire	Seria	Presiune de lucru bar	D1 (mm)	D2 (mm)	D3 (mm)	L1 (mm)	L2 (mm)	L3 (mm)	L4 (mm)	L5 (mm)	L6 (mm)	SW (mm)
XRT 04 08 04 LL	LL	PN 100	4	8	4	17,0	13,0	17,0	13,0	17,0	11,5	12
XRT 06 04 06 LL	LL	PN 100	6	4	6	15,0	9,5	15,0	9,5	15,0	11,0	11
XRT NW 04 06 04 HL	L	PN 315	6	8	6	21,0	14,0	21,0	14,0	21,0	14,0	12
XRT NW 04 08 04 HL	L	PN 315	6	10	6	22,0	15,0	22,0	15,0	22,0	15,0	14
XRT NW 06 04 06 HL	L	PN 315	8	6	8	29,0	14,0	21,0	14,0	21,0	21,0	12
XRT NW 06 06 04 HL	L	PN 315	8	8	6	21,0	14,0	21,0	14,0	21,0	14,0	14
XRT NW 06 08 06 HL	L	PN 315	8	10	8	22,0	15,0	22,0	15,0	22,0	15,0	14
XRT NW 06 10 06 HL	L	PN 315	8	12	8	24,0	17,0	24,0	17,0	24,0	17,0	17
XRT NW 06 13 06 HL	L	PN 315	8	15	8	21,0	14,0	21,0	14,0	21,0	14,0	19
XRT NW 08 04 08 HL	L	PN 315	10	6	10	22,0	15,0	22,0	15,0	22,0	15,0	14
XRT NW 08 06 06 HL	L	PN 315	10	8	8	22,0	15,0	22,0	15,0	22,0	15,0	17
XRT NW 08 06 08 HL	L	PN 315	10	8	10	22,0	15,0	22,0	15,0	22,0	15,0	14
XRT NW 08 08 04 HL	L	PN 315	10	10	6	22,0	15,0	22,0	15,0	22,0	15,0	14
XRT NW 08 10 08 HL	L	PN 315	10	12	10	24,0	17,0	24,0	17,0	24,0	17,0	19
XRT NW 08 13 08 HL	L	PN 315	10	15	10	28,0	21,0	28,0	21,0	28,0	21,0	19
XRT NW 10 04 10 HL	L	PN 315	12	6	12	24,0	17,0	24,0	17,0	24,0	17,0	17
XRT NW 10 06 06 HL	L	PN 315	12	8	8	24,0	17,0	24,0	17,0	24,0	17,0	17
XRT NW 10 06 10 HL	L	PN 315	12	8	12	24,0	17,0	24,0	17,0	24,0	17,0	17
XRT NW 10 08 08 HL	L	PN 315	12	10	10	24,0	17,0	24,0	17,0	24,0	17,0	17
XRT NW 10 08 10 HL	L	PN 315	12	10	12	24,0	17,0	24,0	17,0	24,0	17,0	17
XRT NW 10 10 06 HL	L	PN 315	12	12	8	24,0	17,0	24,0	17,0	24,0	17,0	19
XRT NW 10 10 08 HL	L	PN 315	12	12	10	24,0	17,0	24,0	17,0	24,0	17,0	17
XRT NW 10 13 10 HL	L	PN 315	12	15	12	28,0	21,0	28,0	21,0	28,0	21,0	19
XRT NW 10 16 10 HL	L	PN 315	12	18	12	31,0	24,0	31,0	24,0	31,0	23,5	24
XRT NW 10 20 10 HL	L	PN 160	12	22	12	35,0	28,0	35,0	28,0	35,0	27,5	27
XRT NW 13 04 13 HL	L	PN 315	15	6	15	28,0	21,0	28,0	21,0	28,0	21,0	19
XRT NW 13 06 06 HL	L	PN 315	15	8	8	28,0	21,0	28,0	21,0	28,0	21,0	19
XRT NW 13 06 13 HL	L	PN 315	15	8	15	28,0	21,0	28,0	21,0	28,0	21,0	19
XRT NW 13 08 06 HL	L	PN 315	15	10	8	28,0	21,0	28,0	21,0	28,0	21,0	19
XRT NW 13 08 08 HL	L	PN 315	15	10	10	28,0	21,0	28,0	21,0	28,0	21,0	19
XRT NW 13 08 13 HL	L	PN 315	15	10	15	28,0	21,0	28,0	21,0	28,0	21,0	19
XRT NW 13 10 10 HL	L	PN 315	15	12	12	28,0	21,0	28,0	21,0	28,0	21,0	19
XRT NW 13 10 13 HL	L	PN 315	15	12	15	28,0	21,0	28,0	21,0	28,0	21,0	19
XRT NW 13 13 08 HL	L	PN 315	15	15	10	28,0	21,0	28,0	21,0	28,0	21,0	19
XRT NW 13 13 10 HL	L	PN 315	15	15	12	28,0	21,0	28,0	21,0	28,0	21,0	19
XRT NW 13 16 13 HL	L	PN 315	15	18	15	31,0	24,0	31,0	24,0	31,0	23,5	24
XRT NW 13 20 10 HL	L	PN 160	15	22	12	35,0	28,0	35,0	28,0	35,0	27,5	27
XRT NW 16 06 06 HL	L	PN 315	18	8	8	31,5	24,0	31,0	24,0	30,5	23,5	24
XRT NW 16 06 16 HL	L	PN 315	18	8	18	31,0	23,5	31,0	23,5	31,0	24,0	24
XRT NW 16 08 08 HL	L	PN 315	18	10	10	31,0	23,5	31,0	24,0	31,0	24,0	24
XRT NW 16 08 16 HL	L	PN 315	18	10	18	31,0	23,5	31,0	23,5	31,0	24,0	24
XRT NW 16 10 10 HL	L	PN 315	18	12	12	31,0	23,5	31,0	24,0	31,0	24,0	24
XRT NW 16 10 16 HL	L	PN 315	18	12	18	31,0	23,5	31,0	23,5	31,0	24,0	24
XRT NW 16 13 16 HL	L	PN 315	18	15	18	31,0	23,5	31,0	23,5	31,0	24,0	24

În pofida controlului minuțios nu putem exclude eventualele informații eronate și nu garantăm pentru datele cuprinse.

XRT
Reducție filetată, formă T

HANSA-FLEX

Articol

Denumire	Seria	Presiune de lucru bar	D1 (mm)	D2 (mm)	D3 (mm)	L1 (mm)	L2 (mm)	L3 (mm)	L4 (mm)	L5 (mm)	L6 (mm)	SW (mm)
XRT NW 16 16 06 HL	L	PN 315	18	18	8	31,0	23,5	30,5	23,5	31,0	23,5	24
XRT NW 16 16 08 HL	L	PN 315	18	18	10	31,0	23,5	31,0	24,0	31,0	23,5	24
XRT NW 16 16 10 HL	L	PN 315	18	18	12	31,0	23,5	30,5	23,5	31,5	24,0	24
XRT NW 20 08 20 HL	L	PN 160	22	10	22	35,0	27,5	35,0	27,5	35,0	28,0	27
XRT NW 20 10 20 HL	L	PN 160	22	12	22	35,0	27,5	35,0	27,5	35,0	28,0	27
XRT NW 20 13 13 HL	L	PN 160	22	15	15	35,0	27,5	35,0	28,0	35,0	28,0	27
XRT NW 20 13 20 HL	L	PN 160	22	15	22	35,0	27,5	35,0	27,5	35,0	28,0	27
XRT NW 20 16 16 HL	L	PN 160	22	18	18	35,0	27,5	35,0	27,5	35,0	27,5	27
XRT NW 20 16 20 HL	L	PN 160	22	18	22	35,0	27,5	35,0	27,5	35,0	27,5	27
XRT NW 20 20 16 HL	L	PN 160	22	22	18	35,0	27,5	35,0	27,5	35,0	27,5	27
XRT NW 20 25 20 HL	L	PN 160	22	28	22	38,0	30,5	38,0	30,5	38,0	30,5	36
XRT NW 25 08 25 HL	L	PN 160	28	10	28	38,0	30,5	38,0	30,5	38,0	31,0	36
XRT NW 25 10 25 HL	L	PN 160	28	12	28	38,0	30,5	38,0	30,5	38,0	31,0	36
XRT NW 25 13 25 HL	L	PN 160	28	15	28	38,0	30,5	38,0	30,5	38,0	31,0	36
XRT NW 25 16 25 HL	L	PN 160	28	18	28	38,0	30,5	38,0	30,5	38,0	30,5	36
XRT NW 25 20 20 HL	L	PN 160	28	22	22	38,0	30,5	38,0	30,5	38,0	30,5	36
XRT NW 25 20 25 HL	L	PN 160	28	22	28	38,0	30,5	38,0	30,5	38,0	30,5	36
XRT NW 25 25 20 HL	L	PN 160	28	28	22	38,0	30,5	38,0	30,5	38,0	30,5	36
XRT NW 32 20 32 HL	L	PN 160	35	22	35	45,0	34,5	45,0	34,5	45,0	37,5	41
XRT NW 32 25 25 HL	L	PN 160	35	28	28	45,0	34,5	45,0	37,5	45,0	37,5	41
XRT NW 32 25 32 HL	L	PN 160	35	28	35	45,0	34,5	45,0	34,5	45,0	37,5	41
XRT NW 16 HL 16 HS	L / S	PN 315	20	18	20	37,0	26,5	37,0	26,5	37,0	29,5	27
XRT NW 04 03 04 HS	S	PN 630	8	6	8	20,0	13,0	19,0	12,0	20,0	13,0	12
XRT NW 06 03 06 HS	S	PN 630	10	6	10	25,0	17,5	25,0	17,5	25,0	18,0	17
XRT NW 08 03 08 HS	S	PN 630	12	6	12	24,5	17,0	24,5	17,0	24,0	17,0	17
XRT NW 08 04 04 HS	S	PN 630	12	8	8	29,0	21,5	29,0	22,0	29,0	22,0	17
XRT NW 08 04 08 HS	S	PN 630	12	8	12	29,0	21,5	29,0	21,5	29,0	22,0	17
XRT NW 08 06 08 HS	S	PN 630	12	10	12	29,0	21,5	29,0	21,5	29,0	21,5	17
XRT NW 08 13 08 HS	S	PN 630	12	16	12	33,0	25,5	33,0	25,5	33,0	24,5	24
XRT NW 10 06 10 HS	S	PN 630	14	10	14	30,0	22,0	30,0	22,0	30,0	22,5	19
XRT NW 13 03 13 HS	S	PN 400	16	6	16	33,0	24,5	33,0	24,5	33,0	26,0	24
XRT NW 13 04 13 HS	S	PN 400	16	8	16	33,0	24,5	33,0	24,5	33,0	26,0	24
XRT NW 13 06 13 HS	S	PN 400	16	10	16	33,0	24,5	33,0	24,5	33,0	25,5	24
XRT NW 13 08 13 HS	S	PN 400	16	12	16	33,0	24,5	33,0	24,5	33,0	25,5	24
XRT NW 13 16 13 HS	S	PN 400	16	20	16	37,0	28,5	37,0	28,5	37,0	26,5	27
XRT NW 16 06 16 HS	S	PN 400	20	10	20	37,0	26,5	37,0	26,5	37,0	29,5	27
XRT NW 16 08 16 HS	S	PN 400	20	12	20	37,0	26,5	37,0	26,5	37,0	29,5	27
XRT NW 16 10 16 HS	S	PN 400	20	14	20	37,0	26,5	37,0	26,5	37,5	29,5	27
XRT NW 16 13 16 HS	S	PN 400	20	16	20	37,0	26,5	37,0	26,5	37,0	28,5	27
XRT NW 16 16 20 HS	S	PN 400	20	20	25	39,0	28,5	40,5	28,5	37,0	28,5	36
XRT NW 16 20 16 HS	S	PN 400	20	25	20	42,0	31,5	42,0	31,5	42,0	30,0	36
XRT NW 20 13 20 HS	S	PN 400	25	16	25	42,0	30,0	42,0	30,0	42,0	33,5	36
XRT NW 20 16 20 HS	S	PN 400	25	20	25	42,0	30,0	42,0	30,0	42,0	31,5	36
XRT NW 20 25 20 HS	S	PN 400	25	30	25	49,0	37,0	49,0	37,0	49,0	35,5	41
XRT NW 25 13 25 HS	S	PN 400	30	16	30	49,0	35,5	49,0	35,5	49,0	40,5	41
XRT NW 25 16 25 HS	S	PN 400	30	20	30	49,0	35,5	49,0	35,5	49,0	38,5	41
XRT NW 25 20 25 HS	S	PN 400	30	25	30	49,0	35,5	49,0	35,5	49,0	37,0	41

Seria: LL = foarte ușoară L = ușoară S = grea – PN = Presiunea nominală PB = Presiunea max. de lucru – D1, D2, D3 = diametru exterior țeavă – TGL = M 27 x 2

Variante produs

XRT VA	Reducție filetată, formă T, oțel inoxidabil
RT	Reducție filetată, formă T, Oțel

În pofida controlului minuțios nu putem exclude eventualele informații eronate și nu garantăm pentru datele cuprinse.