VM
Racord filetat tip tată

HANSA-FLEX

Caracteristici

Racord 1	Filet metric exterior cilindric
Formă de etanşare 1	Formă B
Racord 2	Filet metric exterior cilindric
Formă de etanşare 2	Con interior 24°
Tip constructiv	Racord filetat tip tată
Forma constructivă	drept
Standard	DIN 2353 ISO 8434-1
Set de livrare	Ştuţ cu piuliţă olandeză şi inel de tăiere
Material	Oţel
Protecţia suprafeţei	acoperire galvanică



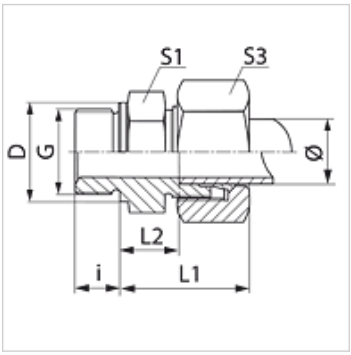

Indicaţie

Indicaţiile privind montajul, asamblarea, încărcarea cu presiune şi temperaturile de regim admisibile se găsesc în informaţiile tehnice referitoare la îmbinările filetate pentru ţevi.

Articol

Denumire	Seria	Presiune de lucru bar	Ø exterior ţeavă (mm)	G	D (mm)	i (mm)	L1 (mm)	L2 (mm)	S1	S3
VM 16 LL	LL	PN 100	16	M 22 x 1,5	27	14	44,0	15,0	27	27
VM 16 LL 16-1.5	LL	PN 100	16	M 16 x 1,5	21	12	40,5	13,5	24	27
VM 16 LL 18-1.5	LL	PN 100	16	M 18 x 1,5	23	12	40,5	13,5	24	27
VM NW 04 HL	L	PN 315	6	M 10 x 1	14	8	23,0	8,5	14	14
VM NW 04 HL 12	L	PN 315	6	M 12 x 1,5	17	12	25,0	10,0	17	14
VM NW 04 HL 14	L	PN 315	6	M 14 x 1,5	19	12	25,0	10,0	19	14
VM NW 04 HL 16	L	PN 315	6	M 16 x 1,5	21	12	25,0	11,5	22	14
VM NW 04 HL 18	L	PN 315	6	M 18 x 1,5	23	12	24,5	11,5	24	14
VM NW 04 HL 22	L	PN 315	6	M 22 x 1,5	27	14	28,0	13,0	27	14
VM NW 06 HL	L	PN 315	8	M 12 x 1,5	17	12	25,0	10,0	17	17
VM NW 06 HL 10	L	PN 315	8	M 10 x 1	17	8	25,0	10,0	17	17
VM NW 06 HL 14	L	PN 315	8	M 14 x 1,5	19	12	25,0	10,0	19	17
VM NW 06 HL 16	L	PN 315	8	M 16 x 1,5	21	12	26,0	11,5	22	17
VM NW 06 HL 18	L	PN 315	8	M 18 x 1,5	23	12	26,0	11,5	24	17
VM NW 06 HL 22	L	PN 315	8	M 22 x 1,5	27	14	28,0	13,0	27	17
VM NW 08 HL	L	PN 315	10	M 14 x 1,5	19	12	26,0	11,0	19	19
VM NW 08 HL 12	L	PN 315	10	M 12 x 1,5	17	12	26,0	11,0	17	19
VM NW 08 HL 16	L	PN 315	10	M 16 x 1,5	22	12	27,5	12,5	22	19
VM NW 08 HL 18	L	PN 315	10	M 18 x 1,5	23	12	27,5	12,5	24	19
VM NW 08 HL 22	L	PN 315	10	M 22 x 1,5	27	14	29,0	14,0	27	19
VM NW 10 HL	L	PN 315	12	M 16 x 1,5	21	12	27,0	12,5	22	22
VM NW 10 HL 12	L	PN 315	12	M 12 x 1,5	17	12	26,0	11,0	19	22
VM NW 10 HL 14	L	PN 315	12	M 14 x 1,5	19	12	27,0	12,5	22	22
VM NW 10 HL 18	L	PN 315	12	M 18 x 1,5	23	12	27,0	12,5	24	22
VM NW 10 HL 22	L	PN 315	12	M 22 x 1,5	27	14	28,5	14,0	27	22
VM NW 10 HL 24	L	PN 315	12	M 24 x 1,5	27	14	28,5	14,0	27	22
VM NW 10 HL 26	L	PN 315	12	M 26 x 1,5	27	14	28,5	14,0	27	22
VM NW 13 HL	L	PN 315	15	M 18 x 1,5	23	12	29,0	13,5	24	27
VM NW 13 HL 14	L	PN 315	15	M 14 x 1,5	19	12	29,0	13,5	24	27
VM NW 13 HL 16	L	PN 315	15	M 16 x 1,5	21	12	29,0	13,5	24	27
VM NW 13 HL 22	L	PN 315	15	M 22 x 1,5	27	14	30,5	15,0	27	27
VM NW 13 HL 26	L	PN 315	15	M 26 x 1,5	31	16	30,5	15,0	32	27
VM NW 13 HL 30	L	PN 315	15	M 30 x 2	39	16	30,5	15,0	41	27
VM NW 16 HL	L	PN 315	18	M 22 x 1,5	27	14	31,0	14,5	27	32
VM NW 16 HL 18	L	PN 315	18	M 18 x 1,5	23	12	30,5	14,0	27	32
VM NW 16 HL 26	L	PN 315	18	M 26 x 1,5	31	16	31,0	14,5	32	32
VM NW 16 HL 27	L	PN 315	18	M 27 x 2	31	16	31,0	14,5	32	32
VM NW 16 HL 30-1.5	L	PN 315	18	M 30 x 1,5	39	16	31,0	15,0	41	27
VM NW 20 HL	L	PN 160	22	M 26 x 1,5	31	16	33,0	16,5	32	36
VM NW 20 HL 18	L	PN 160	22	M 18 x 1,5	27	14	31,0	14,5	27	36
VM NW 20 HL 22	L	PN 160	22	M 22 x 1,5	27	14	33,0	16,5	32	36

În pofida controlului minuţios nu putem exclude eventualele informaţii eronate şi nu garantăm pentru datele cuprinse.

VM
Racord filetat tip tată

HANSA-FLEX

Articol

Denumire	Seria	Presiune de lucru bar	Ø exterior țeavă (mm)	G	D (mm)	i (mm)	L1 (mm)	L2 (mm)	S1	S3
VM NW 20 HL 30-1.5	L	PN 160	22	M 30 x 1,5	39	14	33,0	16,5	41	36
VM NW 25 HL	L	PN 160	28	M 33 x 2	39	18	34,0	17,5	41	41
VM NW 25 HL 22	L	PN 160	28	M 22 x 1,5	27	18	34,0	17,5	32	41
VM NW 25 HL 26	L	PN 160	28	M 26 x 1,5	31	16	34,0	17,5	41	41
VM NW 25 HL 27	L	PN 160	28	M 27 x 2	39	20	34,0	17,5	41	41
VM NW 25 HL 42	L	PN 160	28	M 42 x 2	55	22	34,0	19,0	55	41
VM NW 32 HL	L	PN 160	35	M 42 x 2	49	20	39,0	17,5	50	50
VM NW 40 HL	L	PN 160	42	M 48 x 2	55	22	42,0	19,0	55	60
VM NW 03 HS	S	PN 400	6	M 12 x 1,5	17	12	28,0	13,0	17	17
VM NW 03 HS 16	S	PN 400	6	M 16 x 1,5	21	12	28,0	13,0	17	17
VM NW 03 HS 18	S	PN 400	6	M 18 x 1,5	27	14	28,0	13,0	19	17
VM NW 03 HS 22	S	PN 400	6	M 22 x 1,5	25	14	28,0	13,0	19	17
VM NW 04 HS	S	PN 400	8	M 14 x 1,5	19	12	30,0	15,0	19	19
VM NW 06 HS	S	PN 400	10	M 16 x 1,5	21	12	31,0	15,0	22	22
VM NW 06 HS 18	S	PN 400	10	M 18 x 1,5	27	14	31,0	15,0	22	22
VM NW 06 HS 22	S	PN 400	10	M 22 x 1,5	27	14	31,0	15,0	24	22
VM NW 08 HS	S	PN 400	12	M 18 x 1,5	23	12	33,0	17,0	24	24
VM NW 08 HS 14	S	PN 400	12	M 14 x 1,5	21	12	33,0	17,0	19	24
VM NW 08 HS 16	S	PN 400	12	M 16 x 1,5	21	12	29,0	17,0	24	24
VM NW 08 HS 22	S	PN 400	12	M 22 x 1,5	27	14	33,5	17,5	27	24
VM NW 10 HS	S	PN 400	14	M 20 x 1,5	25	14	37,0	19,0	27	27
VM NW 10 HS 16	S	PN 400	14	M 16 x 1,5	21	12	37,0	19,0	24	27
VM NW 10 HS 18	S	PN 400	14	M 18 x 1,5	27	14	37,0	19,0	24	27
VM NW 10 HS 22	S	PN 400	14	M 22 x 1,5	27	14	37,0	19,0	27	27
VM NW 13 HS	S	PN 400	16	M 22 x 1,5	27	14	37,0	18,5	27	30
VM NW 13 HS 16	S	PN 400	16	M 16 x 1,5	21	12	37,0	18,5	24	30
VM NW 13 HS 18	S	PN 400	16	M 18 x 1,5	23	12	37,0	18,5	27	30
VM NW 13 HS 26	S	PN 400	16	M 26 x 1,5	32	16	37,0	18,5	32	30
VM NW 16 HS	S	PN 400	20	M 27 x 2	32	16	42,0	20,5	32	36
VM NW 16 HS 22	S	PN 400	20	M 22 x 1,5	27	14	42,0	20,5	32	36
VM NW 16 HS 30-1.5	S	PN 400	20	M 30 x 1,5	39	18	42,0	20,5	36	36
VM NW 20 HS	S	PN 250	25	M 33 x 2	39	18	47,0	23,0	41	46
VM NW 20 HS 27	S	PN 250	25	M 27 x 2	32	16	47,0	23,0	41	46
VM NW 25 HS	S	PN 160	30	M 42 x 2	49	20	50,0	23,5	50	50
VM NW 32 HS	S	PN 160	38	M 48 x 2	55	22	57,0	26,0	55	60

Seria: LL = foarte ușoară L = ușoară S = grea – PN = Presiunea nominală PB = Presiunea max. de lucru – Ø = Diametrul exterior al țevii

Variante produs

VM MG	Racord filetat tip tată, Alamă
VM VA	Racord filetat tip tată, oțel inoxidabil
XVM	Racord filetat tip tată, Oțel

În pofida controlului minuțios nu putem exclude eventualele informații eronate și nu garantăm pentru datele cuprinse.