VR MG
Racord filetat tip tată

HANSA-FLEX

Caracteristici

Racord 1	Filete cilindrice exterioare BSP
Formă de etanşare 1	Formă B
Racord 2	Filet metric exterior cilindric
Formă de etanşare 2	Con interior 24°
Tip constructiv	Racord filetat tip tată
Forma constructivă	drept
Standard	DIN 2353 ISO 8434-1
Set de livrare	Ştuţ cu piuliţă olandeză şi inel de tăiere
Material	Alamă



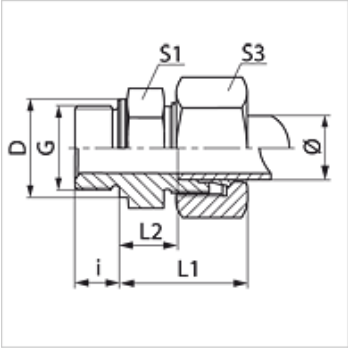

Indicaţie

Indicaţiile privind montajul, asamblarea, încărcarea cu presiune şi temperaturile de regim admisibile se găsesc în informaţiile tehnice referitoare la îmbinările filetate pentru ţevi.

Articol

Denumire	Seria	Presiune de lucru bar	Ø exterior ţeavă (mm)	G	D (mm)	i (mm)	L1 (mm)	L2 (mm)	S1	S3
VR NW 04 HL MG	L	PN 200	6	G 1/8" -28	14	8	23,0	8,5	14	14
VR NW 04 HL 1/4 MG	L	PN 200	6	G 1/4" -19	18	12	24,5	10,0	19	14
VR NW 04 HL 3/8 MG	L	PN 200	6	G 3/8" -19	22	12	26,0	11,5	22	14
VR NW 04 HL 1/2 MG	L	PN 200	6	G 1/2" -14	26	14	26,5	12,0	27	14
VR NW 06 HL 1/8 MG	L	PN 200	8	G 1/8" -28	14	8	24,0	9,0	14	17
VR NW 06 HL MG	L	PN 200	8	G 1/4" -19	18	12	25,0	10,0	19	17
VR NW 06 HL 3/8 MG	L	PN 200	8	G 3/8" -19	22	12	26,5	11,5	22	17
VR NW 06 HL 1/2 MG	L	PN 200	8	G 1/2" -14	26	14	27,0	12,0	27	17
VR NW 08 HL MG	L	PN 200	10	G 1/4" -19	18	12	26,0	11,0	19	19
VR NW 08 HL 3/8 MG	L	PN 200	10	G 3/8" -19	22	12	27,5	12,5	22	19
VR NW 08 HL 1/2 MG	L	PN 200	10	G 1/2" -14	26	14	28,0	13,0	27	19
VR NW 10 HL 1/4 MG	L	PN 200	12	G 1/4" -19	18	12	26,5	12,0	19	22
VR NW 10 HL MG	L	PN 200	12	G 3/8" -19	22	12	27,0	12,5	22	22
VR NW 10 HL 1/2 MG	L	PN 200	12	G 1/2" -14	26	14	27,5	13,0	27	22
VR NW 13 HL 3/8 MG	L	PN 160	15	G 3/8" -19	22	12	29,0	14,0	24	27
VR NW 13 HL MG	L	PN 160	15	G 1/2" -14	26	14	29,0	14,0	27	27
VR NW 16 HL MG	L	PN 160	18	G 1/2" -14	26	14	31,0	14,5	27	32
VR NW 20 HL 1/2 MG	L	PN 100	22	G 1/2" -14	26	14	33,0	16,5	32	36
VR NW 20 HL MG	L	PN 100	22	G 3/4" -14	32	16	33,0	16,5	32	36
VR NW 25 HL MG	L	PN 100	28	G 1" -11	39	18	34,0	17,5	41	41
VR NW 32 HL MG	L	PN 100	35	G 1.1/4" -11	49	20	39,0	17,5	50	50
VR NW 40 HL MG	L	PN 100	42	G 1.1/2" -11	55	22	42,0	19,0	55	60
VR NW 03 HS MG	S	PN 250	6	G 1/4" -19	18	12	28,0	13,0	19	17
VR NW 04 HS MG	S	PN 250	8	G 1/4" -19	18	12	30,0	15,0	19	19
VR NW 04 HS 1/2 MG	S	PN 250	8	G 1/2" -14	26	14	34,0	17,5	27	19
VR NW 06 HS 1/4 MG	S	PN 250	10	G 1/4" -19	18	12	30,5	14,5	22	22
VR NW 06 HS MG	S	PN 250	10	G 3/8" -19	22	12	31,0	15,0	22	22
VR NW 06 HS 1/2 MG	S	PN 250	10	G 1/2" -14	26	14	33,5	17,5	27	22
VR NW 08 HS MG	S	PN 250	12	G 3/8" -19	22	12	33,0	17,0	22	24
VR NW 08 HS 1/2 MG	S	PN 250	12	G 1/2" -14	26	14	33,5	17,5	27	24
VR NW 10 HS MG	S	PN 250	14	G 1/2" -14	26	14	37,0	19,0	27	27
VR NW 13 HS MG	S	PN 250	16	G 1/2" -14	26	14	37,0	18,5	27	30
VR NW 16 HS 1/2 MG	S	PN 250	20	G 1/2" -14	26	14	44,0	22,5	32	36
VR NW 16 HS MG	S	PN 250	20	G 3/4" -14	39	18	44,0	22,5	32	36
VR NW 20 HS 3/4 MG	S	PN 160	25	G 3/4" -14	32	16	47,0	23,0	41	46
VR NW 20 HS MG	S	PN 160	25	G 1" -11	39	18	47,0	23,0	41	46
VR NW 25 HS MG	S	PN 100	30	G 1.1/4" -11	49	20	50,0	23,5	50	50
VR NW 32 HS MG	S	PN 100	38	G 1.1/2" -11	55	22	57,0	26,0	55	60

Seria: LL = foarte uşoară L = uşoară S = grea – PN = Presiunea nominală PB = Presiunea max. de lucru – Ø = Diametrul exterior al ţevii

Variante produs

VR	Racord filetat tip tată, Oţel

În pofida controlului minuţios nu putem exclude eventualele informaţii eronate şi nu garantăm pentru datele cuprinse.

În pofida controlului minuțios nu putem exclude eventualele informații eronate și nu garantăm pentru datele cuprinse.