XGAM
Racord filetat tip mamă

HANSA-FLEX

Caracteristici

Racord 1	Filet metric interior cilindric
Formă de etanşare 1	Formă A
Racord 2	Filet metric exterior cilindric
Formă de etanşare 2	Con interior 24°
Tip constructiv	Racord filetat tip mamă
Forma constructivă	drept
Standard	DIN 2353 ISO 8434-1
Set de livrare	Ştuţ (fără piuliţă olandeză şi inel de tăiere)
Material	Oţel
Protecţia suprafeţei	acoperire galvanică



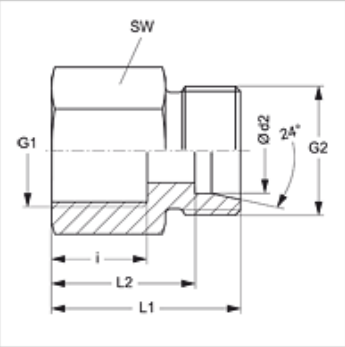

Indicaţie

Indicaţiile privind montajul, asamblarea, încărcarea cu presiune şi temperaturile de regim admisibile se găsesc în informaţiile tehnice referitoare la îmbinările filetate pentru ţevi.

Articol

Denumire	Seria	Presiune de lucru bar	Ø d2 (mm)	G1	G2	i (mm)	L1 (mm)	L2 (mm)	SW (mm)
XGAM NW 04 HL	L	PN 315	6	M 10 x 1	M 12 x 1,5	12,5	26,5	19,5	14
XGAM NW 04 HL 22	L	PN 315	6	M 22 x 1,5	M 12 x 1,5	19,0	35,0	28,0	27
XGAM NW 06 HL	L	PN 315	8	M 12 x 1,5	M 14 x 1,5	17,0	31,0	24,0	17
XGAM NW 06 HL 22	L	PN 315	8	M 22 x 1,5	M 14 x 1,5	19,0	35,0	29,0	27
XGAM NW 08 HL	L	PN 315	10	M 14 x 1,5	M 16 x 1,5	17,0	32,0	25,0	19
XGAM NW 08 HL 22	L	PN 315	10	M 22 x 1,5	M 16 x 1,5	19,0	36,0	29,0	27
XGAM NW 10 HL	L	PN 315	12	M 16 x 1,5	M 18 x 1,5	17,0	33,0	26,0	22
XGAM NW 10 HL 18	L	PN 315	12	M 18 x 1,5	M 18 x 1,5	17,0	34,0	27,0	24
XGAM NW 10 HL 22	L	PN 315	12	M 22 x 1,5	M 18 x 1,5	19,0	36,0	29,0	27
XGAM NW 13 HL	L	PN 315	15	M 18 x 1,5	M 22 x 1,5	17,0	35,0	28,0	24
XGAM NW 13 HL 22	L	PN 315	15	M 22 x 1,5	M 22 x 1,5	19,0	37,0	30,0	27
XGAM NW 16 HL	L	PN 315	18	M 22 x 1,5	M 26 x 1,5	19,0	37,0	29,5	27
XGAM NW 20 HL	L	PN 160	22	M 26 x 1,5	M 30 x 2	21,0	42,0	34,5	32
XGAM NW 25 HL	L	PN 160	28	M 33 x 2	M 36 x 2	24,0	45,0	37,5	41
XGAM NW 32 HL	L	PN 160	35	M 42 x 2	M 45 x 2	26,0	51,0	40,5	55
XGAM NW 40 HL	L	PN 160	42	M 48 x 2	M 52 x 2	28,0	53,0	42,0	60
XGAM NW 03 HS	S	PN 400	6	M 12 x 1,5	M 14 x 1,5	17,0	33,0	26,0	17
XGAM NW 04 HS	S	PN 400	8	M 14 x 1,5	M 16 x 1,5	17,0	33,0	26,0	19
XGAM NW 06 HS	S	PN 400	10	M 16 x 1,5	M 18 x 1,5	17,0	34,0	26,5	22
XGAM NW 08 HS	S	PN 400	12	M 18 x 1,5	M 20 x 1,5	17,0	35,0	27,5	24
XGAM NW 10 HS	S	PN 400	14	M 20 x 1,5	M 22 x 1,5	19,0	39,0	31,0	27
XGAM NW 13 HS	S	PN 400	16	M 22 x 1,5	M 24 x 1,5	19,0	39,0	30,5	30
XGAM NW 16 HS	S	PN 315	20	M 27 x 2	M 30 x 2	22,0	45,0	34,5	36
XGAM NW 20 HS	S	PN 315	25	M 33 x 2	M 36 x 2	24,0	49,0	37,0	41
XGAM NW 25 HS	S	PN 315	30	M 42 x 2	M 42 x 2	26,0	55,0	41,5	55
XGAM NW 32 HS	S	PN 250	38	M 48 x 2	M 52 x 2	28,0	59,0	43,0	60

Seria: LL = foarte uşoară L = uşoară S = grea – PN = Presiunea nominală PB = Presiunea max. de lucru – Ø d2 = diametru exterior ţeavă

Variante produs

XGAM VA	Racord filetat tip mamă, oţel inoxidabil
GAM	Racord filetat tip mamă, Oţel

În pofida controlului minuţios nu putem exclude eventualele informaţii eronate şi nu garantăm pentru datele cuprinse.