# LOET DKF
Ștuț alămit DKF

## Caracteristici

| | |
|---|---|
| **Tip constructiv** | Ștuț alămit |
| **Forma constructivă** | drept |
| **Material** | Oțel |
| **Protecția suprafeței** | uns |



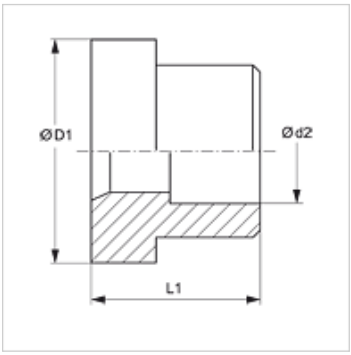


## Articol

| Denumire | Ø d2 (mm) | Ø D1 (mm) | L1 (mm) |
|---|---|---|---|
| **LOET 06 DKF 06** | 6 | 13,0 | 10,0 |
| **LOET 10 DKF 08** | 8 | 16,0 | 10,0 |
| **LOET 10 DKF 10** | 10 | 16,0 | 10,0 |
| **LOET 13 DKF 12** | 12 | 19,0 | 10,0 |
| **LOET 16 DKF 14** | 14 | 23,0 | 11,0 |
| **LOET 16 DKF 15** | 15 | 23,0 | 11,0 |
| **LOET 16 DKF 16** | 16 | 23,0 | 11,0 |
| **LOET 20 DKF 18** | 18 | 28,0 | 14,0 |
| **LOET 20 DKF 20** | 20 | 28,0 | 14,0 |
| **LOET 20 DKF 22** | 22 | 28,0 | 14,0 |
| **LOET 25 DKF 25** | 25 | 34,0 | 16,0 |
| **LOET 32 DKF 30** | 30 | 41,0 | 16,0 |
| **LOET 32 DKF 32** | 32 | 41,0 | 16,0 |
| **LOET 40 DKF 35** | 35 | 49,0 | 16,0 |
| **LOET 40 DKF 38** | 38 | 49,0 | 16,0 |

Ø d2 = diametru exterior țeavă

*În pofida controlului minuțios nu putem exclude eventualele informații eronate și nu garantăm pentru datele cuprinse.*