XV
Îmbinare filetată

HANSA-FLEX

Caracteristici

Racord 1	Filet metric exterior cilindric
Formă de etanşare 1	Con interior 24°
Racord 2	Filet metric exterior cilindric
Formă de etanşare 2	Con interior 24°
Tip constructiv	Îmbinare filetată
Forma constructivă	drept
Standard	ISO 8434-1
Set de livrare	Ştuţ (fără piuliţă olandeză şi inel de tăiere)
Material	Oţel
Protecţia suprafeţei	acoperire galvanică



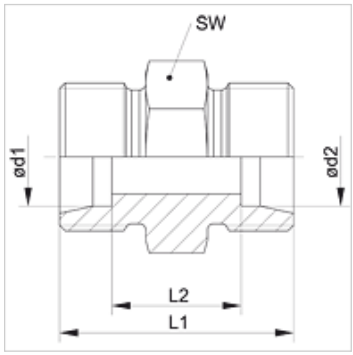

Indicaţie

Indicaţiile privind montajul, asamblarea, încărcarea cu presiune şi temperaturile de regim admisibile se găsesc în informaţiile tehnice referitoare la îmbinările filetate pentru ţevi.

Articol

Denumire	Seria	Presiune de lucru bar	Ø d1 (mm)	Ø d2 (mm)	L1 (mm)	L2 (mm)	SW (mm)
XV 04 LL	LL	PN 100	4	4	20	12,0	9
XV 05 LL	LL	PN 100	5	5	20	9,0	11
XV 06 LL 04	LL	PN 100	6	4	20	10,5	11
XV 06 LL	LL	PN 100	6	6	20	9,0	11
XV 08 LL 04	LL	PN 100	8	4	22	12,5	12
XV 08 LL 06	LL	PN 100	8	6	22	11,0	12
XV 08 LL	LL	PN 100	8	8	23	12,0	12
XV 10 LL	LL	PN 100	10	10	23	12,0	14
XV 12 LL	LL	PN 100	12	12	23	11,0	17
XV NW 04 HL	L	PN 315	6	6	24	10,0	12
XV NW 06 HL 04	L	PN 315	8	6	25	11,0	14
XV NW 06 HL	L	PN 315	8	8	25	11,0	14
XV NW 08 HL 04	L	PN 315	10	6	26	12,0	17
XV NW 08 HL 06	L	PN 315	10	8	26	12,0	17
XV NW 08 HL	L	PN 315	10	10	27	13,0	17
XV NW 10 HL 04	L	PN 315	12	6	27	13,0	19
XV NW 10 HL 06	L	PN 315	12	8	27	13,0	19
XV NW 10 HL 08	L	PN 315	12	10	28	14,0	19
XV NW 10 HL	L	PN 315	12	12	28	14,0	19
XV NW 13 HL 04	L	PN 315	15	6	28	14,0	24
XV NW 13 HL 06	L	PN 315	15	8	28	14,0	24
XV NW 13 HL 08	L	PN 315	15	10	29	15,0	24
XV NW 13 HL 10	L	PN 315	15	12	29	15,0	24
XV NW 13 HL	L	PN 315	15	15	30	16,0	24
XV NW 16 HL 04	L	PN 315	18	6	29	14,5	27
XV NW 16 HL 06	L	PN 315	18	8	29	14,5	27
XV NW 16 HL 08	L	PN 315	18	10	30	15,5	27
XV NW 16 HL 10	L	PN 315	18	12	30	15,5	27
XV NW 16 HL 10 27	L	PN 315	18	12	32	17,5	27
XV NW 16 HL 13	L	PN 315	18	15	31	16,5	27
XV NW 16 HL	L	PN 315	18	18	31	16,0	27
XV NW 16 HL 27	L	PN 315	18	18	35	20,0	27
XV NW 20 HL 06	L	PN 160	22	8	31	16,5	32
XV NW 20 HL 08	L	PN 160	22	10	32	17,5	32
XV NW 20 HL 10	L	PN 160	22	12	32	17,5	32
XV NW 20 HL 13	L	PN 160	22	15	33	18,5	32
XV NW 20 HL 16	L	PN 160	22	18	33	18,0	32
XV NW 20 HL 16 27	L	PN 160	22	18	35	20,0	32
XV NW 20 HL	L	PN 160	22	22	35	20,0	32
XV NW 25 HL 06	L	PN 160	28	8	33	18,5	41
XV NW 25 HL 08	L	PN 160	28	10	34	19,5	41
XV NW 25 HL 10	L	PN 160	28	12	34	19,5	41

În pofida controlului minuţios nu putem exclude eventualele informaţii eronate şi nu garantăm pentru datele cuprinse.

Articol

Denumire	Seria	Presiune de lucru bar	Ø d1 (mm)	Ø d2 (mm)	L1 (mm)	L2 (mm)	SW (mm)
XV NW 25 HL 13	L	PN 160	28	15	35	20,5	41
XV NW 25 HL 16	L	PN 160	28	18	35	20,0	41
XV NW 25 HL 16 27	L	PN 160	28	18	37	22,0	41
XV NW 25 HL 20	L	PN 160	28	22	37	22,0	41
XV NW 25 HL	L	PN 160	28	28	36	21,0	41
XV NW 32 HL 20	L	PN 160	35	22	39	21,0	46
XV NW 32 HL 25	L	PN 160	35	28	39	21,0	46
XV NW 32 HL	L	PN 160	35	35	41	20,0	46
XV NW 40 HL 25	L	PN 160	42	28	41	22,5	55
XV NW 40 HL 32	L	PN 160	42	35	43	21,5	55
XV NW 40 HL	L	PN 160	42	42	66	21,0	55
XV NW 16 HL 13 HS	L / S	PN 315	18	16	33	17,0	27
XV NW 03 HS	S	PN 630	6	6	30	16,0	14
XV NW 04 HS 03	S	PN 630	8	6	32	18,0	17
XV NW 04 HS	S	PN 630	8	8	32	18,0	17
XV NW 06 HS 03	S	PN 630	10	6	32	17,5	19
XV NW 06 HS 04	S	PN 630	10	8	32	17,5	19
XV NW 06 HS	S	PN 630	10	10	32	17,0	19
XV NW 08 HS 03	S	PN 630	12	6	34	19,5	22
XV NW 08 HS 04	S	PN 630	12	8	34	19,5	22
XV NW 08 HS 06	S	PN 630	12	10	34	19,0	22
XV NW 08 HS	S	PN 630	12	12	34	19,0	22
XV NW 10 HS 03	S	PN 630	14	6	36	21,0	24
XV NW 10 HS 04	S	PN 630	14	8	36	21,0	24
XV NW 10 HS 06	S	PN 630	14	10	36	20,5	24
XV NW 10 HS 08	S	PN 630	14	12	36	20,5	24
XV NW 10 HS	S	PN 630	14	14	38	22,0	24
XV NW 13 HS 03	S	PN 400	16	6	36	20,5	27
XV NW 13 HS 04	S	PN 400	16	8	36	20,5	27
XV NW 13 HS 06	S	PN 400	16	10	36	20,0	27
XV NW 13 HS 08	S	PN 400	16	12	36	20,0	27
XV NW 13 HS 10	S	PN 400	16	14	38	21,5	27
XV NW 13 HS	S	PN 400	16	16	38	21,0	27
XV NW 16 HS 06	S	PN 400	20	10	40	22,0	32
XV NW 16 HS 08	S	PN 400	20	12	40	22,0	32
XV NW 16 HS 10	S	PN 400	20	14	42	23,5	32
XV NW 16 HS 13	S	PN 400	20	16	42	23,0	32
XV NW 16 HS	S	PN 400	20	20	44	23,0	32
XV NW 20 HS 13	S	PN 400	25	16	46	25,5	41
XV NW 20 HS 16	S	PN 400	25	20	48	25,5	41
XV NW 20 HS	S	PN 400	25	25	50	26,0	41
XV NW 25 HS 13	S	PN 400	30	16	48	26,0	46
XV NW 25 HS 16	S	PN 400	30	20	50	26,0	46
XV NW 25 HS 20	S	PN 400	30	25	52	26,5	46
XV NW 25 HS	S	PN 400	30	30	54	27,0	46
XV NW 32 HS 13	S	PN 315	38	16	53	28,5	55
XV NW 32 HS 20	S	PN 315	38	25	57	29,0	55
XV NW 32 HS 25	S	PN 315	38	30	59	29,5	55
XV NW 32 HS	S	PN 315	38	38	61	29,0	55
XV NW 13 HS 13 HL	S / L	PN 400	16	15	36	20,5	27
XV NW 16 HS 13 HL	S / L	PN 400	20	15	40	22,5	32
XV NW 16 HS 16 HL	S / L	PN 400	20	18	40	22,0	32
XV NW 20 HS 20 HL	S / L	PN 400	25	22	46	26,5	41

Seria: LL = foarte ușoară L = ușoară S = grea – PN = Presiunea nominală PB = Presiunea max. de lucru – Ø d1 = diametru exterior țeavă – Ø d2 = diametru exterior țeavă

Variante produs

XV VA	Îmbinare filetată, oțel inoxidabil
V-LL / V-HL / V-HS	Îmbinare filetată, Oțel