XV VA
Îmbinare filetată

HANSA-FLEX

Caracteristici

Racord 1	Filet metric exterior cilindric
Formă de etanşare 1	Con interior 24°
Racord 2	Filet metric exterior cilindric
Formă de etanşare 2	Con interior 24°
Tip constructiv	Îmbinare filetată
Forma constructivă	drept
Standard	ISO 8434-1
Set de livrare	Ştuţ (fără piuliţă olandeză şi inel de tăiere)
Material	oţel inoxidabil



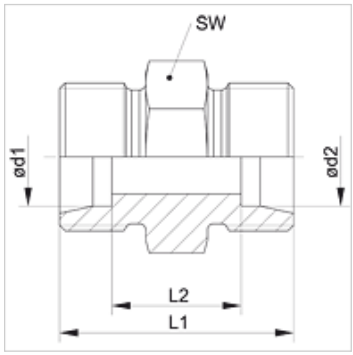

Indicaţie

Indicaţiile privind montajul, asamblarea, încărcarea cu presiune şi temperaturile de regim admisibile se găsesc în informaţiile tehnice referitoare la îmbinările filetate pentru ţevi.

Articol

Denumire	Seria	Presiune de lucru bar	Ø d1 (mm)	Ø d2 (mm)	L1 (mm)	L2 (mm)	SW (mm)
XV 04 LL VA	LL	PN 100	4	4	20,0	12,0	9
XV 06 LL 04 VA	LL	PN 100	6	4	20,0	10,5	11
XV 06 LL VA	LL	PN 100	6	6	20,0	9,0	11
XV 08 LL 04 VA	LL	PN 100	8	4	22,0	12,5	12
XV 08 LL 06 VA	LL	PN 100	8	6	22,0	11,0	12
XV 08 LL VA	LL	PN 100	8	8	23,0	12,0	12
XV NW 04 HL VA	L	PN 315	6	6	24,0	10,0	12
XV NW 06 HL 04 VA	L	PN 315	8	6	25,0	11,0	14
XV NW 06 HL VA	L	PN 315	8	8	25,0	11,0	14
XV NW 08 HL 04 VA	L	PN 315	10	6	26,0	12,0	17
XV NW 08 HL 06 VA	L	PN 315	10	8	26,0	12,0	17
XV NW 08 HL VA	L	PN 315	10	10	27,0	13,0	17
XV NW 10 HL 04 VA	L	PN 315	12	6	27,0	13,0	19
XV NW 10 HL 06 VA	L	PN 315	12	8	27,0	13,0	19
XV NW 10 HL 08 VA	L	PN 315	12	10	28,0	14,0	19
XV NW 10 HL VA	L	PN 315	12	12	28,0	14,0	19
XV NW 13 HL 04 VA	L	PN 315	15	6	28,0	14,0	24
XV NW 13 HL 06 VA	L	PN 315	15	8	28,0	14,0	24
XV NW 13 HL 08 VA	L	PN 315	15	10	29,0	15,0	24
XV NW 13 HL 10 VA	L	PN 315	15	12	29,0	15,0	24
XV NW 13 HL VA	L	PN 315	15	15	30,0	16,0	24
XV NW 16 HL 06 VA	L	PN 315	18	8	29,0	14,5	27
XV NW 16 HL 08 VA	L	PN 315	18	10	30,0	15,5	27
XV NW 16 HL 10 VA	L	PN 315	18	12	30,0	15,5	27
XV NW 16 HL 13 VA	L	PN 315	18	15	31,0	16,5	27
XV NW 16 HL VA	L	PN 315	18	18	31,0	16,0	27
XV NW 20 HL 08 VA	L	PN 160	22	10	32,0	17,5	32
XV NW 20 HL 10 VA	L	PN 160	22	12	32,0	17,5	32
XV NW 20 HL 13 VA	L	PN 160	22	15	33,0	18,5	32
XV NW 20 HL 16 VA	L	PN 160	22	18	33,0	18,0	32
XV NW 20 HL VA	L	PN 160	22	22	35,0	20,0	32
XV NW 25 HL 08 VA	L	PN 160	28	10	34,0	19,5	41
XV NW 25 HL 10 VA	L	PN 160	28	12	34,0	19,5	41
XV NW 25 HL 13 VA	L	PN 160	28	15	35,0	20,5	41
XV NW 25 HL 16 VA	L	PN 160	28	18	35,0	20,0	41
XV NW 25 HL 20 VA	L	PN 160	28	22	37,0	22,0	41
XV NW 25 HL VA	L	PN 160	28	28	36,0	21,0	41
XV NW 32 HL 13 VA	L	PN 160	35	15	37,0	19,5	46
XV NW 32 HL 16 VA	L	PN 160	35	18	37,0	19,0	46
XV NW 32 HL 20 VA	L	PN 160	35	22	39,0	21,0	46
XV NW 32 HL 25 VA	L	PN 160	35	28	39,0	21,0	46
XV NW 32 HL VA	L	PN 160	35	35	41,0	20,0	46
XV NW 40 HL 13 VA	L	PN 160	42	15	39,0	21,0	55

În pofida controlului minuţios nu putem exclude eventualele informaţii eronate şi nu garantăm pentru datele cuprinse.

Articol

Denumire	Seria	Presiune de lucru bar	Ø d1 (mm)	Ø d2 (mm)	L1 (mm)	L2 (mm)	SW (mm)
XV NW 40 HL 16 VA	L	PN 160	42	18	39,0	21,5	55
XV NW 40 HL 20 VA	L	PN 160	42	22	39,5	21,0	55
XV NW 40 HL 25 VA	L	PN 160	42	28	41,0	22,5	55
XV NW 40 HL 32 VA	L	PN 160	42	35	43,0	21,5	55
XV NW 40 HL VA	L	PN 160	42	42	66,0	21,0	55
XV NW 03 HS VA	S	PN 630	6	6	30,0	16,0	14
XV NW 04 HS 03 VA	S	PN 630	8	6	32,0	18,0	17
XV NW 04 HS VA	S	PN 630	8	8	32,0	18,0	17
XV NW 06 HS 03 VA	S	PN 630	10	6	32,0	17,5	19
XV NW 06 HS 04 VA	S	PN 630	10	8	32,0	17,5	19
XV NW 06 HS VA	S	PN 630	10	10	32,0	17,0	19
XV NW 08 HS 03 VA	S	PN 630	12	6	34,0	19,5	22
XV NW 08 HS 04 VA	S	PN 630	12	8	34,0	19,5	22
XV NW 08 HS 06 VA	S	PN 630	12	10	34,0	19,0	22
XV NW 08 HS VA	S	PN 630	12	12	34,0	19,0	22
XV NW 10 HS 03 VA	S	PN 630	14	6	36,0	21,0	24
XV NW 10 HS 04 VA	S	PN 630	14	8	36,0	21,0	24
XV NW 10 HS 06 VA	S	PN 630	14	10	36,0	20,5	24
XV NW 10 HS 08 VA	S	PN 630	14	12	36,0	20,5	24
XV NW 10 HS VA	S	PN 630	14	14	38,0	22,0	24
XV NW 13 HS 03 VA	S	PN 400	16	6	36,0	20,5	27
XV NW 13 HS 04 VA	S	PN 400	16	8	36,0	20,5	27
XV NW 13 HS 06 VA	S	PN 400	16	10	36,0	20,0	27
XV NW 13 HS 08 VA	S	PN 400	16	12	36,0	20,0	27
XV NW 13 HS 10 VA	S	PN 400	16	14	38,0	21,5	27
XV NW 13 HS VA	S	PN 400	16	16	38,0	21,0	27
XV NW 16 HS 03 VA	S	PN 400	20	6	40,0	22,5	32
XV NW 16 HS 04 VA	S	PN 400	20	8	40,0	22,5	32
XV NW 16 HS 06 VA	S	PN 400	20	10	40,0	22,0	32
XV NW 16 HS 08 VA	S	PN 400	20	12	40,0	22,0	32
XV NW 16 HS 10 VA	S	PN 400	20	14	42,0	23,5	32
XV NW 16 HS 13 VA	S	PN 400	20	16	42,0	23,0	32
XV NW 16 HS VA	S	PN 400	20	20	44,0	23,0	32
XV NW 20 HS 04 VA	S	PN 400	25	8	44,0	25,0	41
XV NW 20 HS 06 VA	S	PN 400	25	10	44,0	24,5	41
XV NW 20 HS 08 VA	S	PN 400	25	12	44,0	24,5	41
XV NW 20 HS 10 VA	S	PN 400	25	14	46,0	26,0	41
XV NW 20 HS 13 VA	S	PN 400	25	16	46,0	25,5	41
XV NW 20 HS 16 VA	S	PN 400	25	20	48,0	25,5	41
XV NW 20 HS VA	S	PN 400	25	25	50,0	26,0	41
XV NW 25 HS 06 VA	S	PN 400	30	10	46,5	25,5	46
XV NW 25 HS 08 VA	S	PN 400	30	12	46,0	25,0	46
XV NW 25 HS 10 VA	S	PN 400	30	14	48,0	26,5	46
XV NW 25 HS 13 VA	S	PN 400	30	16	48,0	26,0	46
XV NW 25 HS 16 VA	S	PN 400	30	20	50,0	26,0	46
XV NW 25 HS 20 VA	S	PN 400	30	25	52,0	26,5	46
XV NW 25 HS VA	S	PN 400	30	30	54,0	27,0	46
XV NW 32 HS 06 VA	S	PN 315	38	10	51,5	28,0	55
XV NW 32 HS 08 VA	S	PN 315	38	12	51,0	27,5	55
XV NW 32 HS 10 VA	S	PN 315	38	14	53,0	29,0	55
XV NW 32 HS 13 VA	S	PN 315	38	16	53,0	28,5	55
XV NW 32 HS 16 VA	S	PN 315	38	20	55,0	28,5	55
XV NW 32 HS 20 VA	S	PN 315	38	25	57,0	29,0	55
XV NW 32 HS 25 VA	S	PN 315	38	30	59,0	29,5	55
XV NW 32 HS VA	S	PN 315	38	38	61,0	29,0	55

Seria: LL = foarte ușoară L = ușoară S = grea – PN = Presiunea nominală PB = Presiunea max. de lucru – Ø d1 = diametru exterior țeavă – Ø d2 = diametru exterior țeavă

Variante produs

XV	Îmbinare filetată, Oțel
V-LL VA / V-HL VA / V-HS VA	Îmbinare filetată, oțel inoxidabil

În pofida controlului minuțios nu putem exclude eventualele informații eronate și nu garantăm pentru datele cuprinse.