XVMO
Racord filetat tip tată

HANSA-FLEX

Caracteristici

Racord 1	Filet metric exterior cilindric
Formă de etanşare 1	Formă F
Racord 2	Filet metric exterior cilindric
Formă de etanşare 2	Con interior 24°
Tip constructiv	Racord filetat tip tată
Forma constructivă	drept
Standard	ISO 8434-1
Set de livrare	Ştuţ (fără piuliţă olandeză şi inel de tăiere)
Material	Oţel
Protecţia suprafeţei	acoperire galvanică



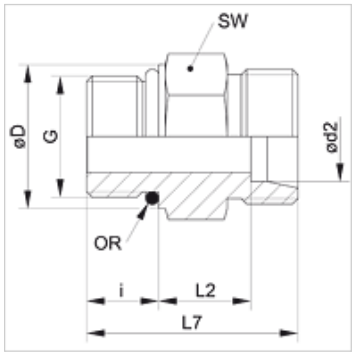

Indicaţie

Indicaţiile privind montajul, asamblarea, încărcarea cu presiune şi temperaturile de regim admisibile se găsesc în informaţiile tehnice referitoare la îmbinările filetate pentru ţevi.

Articol

Denumire	Seria	Presiune de lucru bar	Ø d2 (mm)	G	Ø D (mm)	i (mm)	L2 (mm)	L7 (mm)	SW (mm)	Inel O
XVMO 04 LL	LL	PN 100	4	M 8 x 1	10,8	6,5	9,5	20,0	11	6,1 x 1,6
XVMO 04 LL 10	LL	PN 100	4	M 10 x 1	12,8	6,5	9,5	20,0	13	8,0 x 1,5
XVMO 06 LL	LL	PN 100	6	M 10 x 1	12,8	6,5	8,0	20,0	13	8,0 x 1,5
XVMO NW 04 HL	L	PN 250	6	M 10 x 1	14,0	8,5	8,5	24,0	14	8,0 x 1,5
XVMO NW 06 HL	L	PN 250	8	M 12 x 1,5	17,0	11,0	10,0	28,0	17	9,3 x 2,4
XVMO NW 08 HL	L	PN 250	10	M 14 x 1,5	19,0	11,0	11,0	29,0	19	11,3 x 2,4
XVMO NW 10 HL	L	PN 250	12	M 16 x 1,5	22,0	11,5	12,5	31,0	22	13,3 x 2,4
XVMO NW 10 HL 18	L	PN 315	12	M 18 x 1,5	24,0	12,0	12,5	31,5	24	15,3 x 2,4
XVMO NW 13 HL	L	PN 250	15	M 18 x 1,5	24,0	12,5	13,5	33,0	24	15,3 x 2,4
XVMO NW 13 HL 22	L	PN 315	15	M 22 x 1,5	27,0	13,0	15,0	35,0	27	19,3 x 2,4
XVMO NW 16 HL	L	PN 160	18	M 22 x 1,5	27,0	13,0	14,5	35,0	27	19,3 x 2,4
XVMO NW 20 HL	L	PN 160	22	M 26 x 1,5	31,0	16,0	17,5	41,0	41	23,3 x 2,4
XVMO NW 20 HL 27	L	PN 160	22	M 27 x 2	32,0	16,0	16,5	40,0	32	23,6 x 2,9
XVMO NW 25 HL	L	PN 100	28	M 33 x 2	41,0	16,0	17,5	41,0	41	29,5 x 3,0
XVMO NW 32 HL	L	PN 100	35	M 42 x 2	50,0	16,0	17,5	44,0	50	38,0 x 3,0
XVMO NW 40 HL	L	PN 160	42	M 48 x 2	55,0	17,5	19,0	47,5	55	44,6 x 3,0
XVMO NW 03 HS	S	PN 630	6	M 12 x 1,5	17,0	11,0	13,0	31,0	17	9,3 x 2,4
XVMO NW 04 HS	S	PN 630	8	M 14 x 1,5	19,0	11,0	15,0	33,0	19	11,3 x 2,4
XVMO NW 06 HS	S	PN 630	10	M 16 x 1,5	22,0	12,5	15,0	35,0	22	13,3 x 2,4
XVMO NW 08 HS	S	PN 630	12	M 18 x 1,5	24,0	14,0	17,0	38,5	24	15,3 x 2,4
XVMO NW 13 HS	S	PN 400	16	M 22 x 1,5	27,0	15,0	18,5	42,0	27	19,3 x 2,4
XVMO NW 16 HS	S	PN 400	20	M 27 x 2	32,0	18,5	20,5	19,5	32	23,5 x 3,0
XVMO NW 20 HS	S	PN 400	25	M 33 x 2	41,0	18,5	23,0	53,5	41	29,5 x 3,0
XVMO NW 25 HS	S	PN 250	30	M 42 x 2	50,0	19,0	23,5	56,0	50	38,0 x 3,0
XVMO NW 32 HS	S	PN 315	38	M 48 x 2	55,0	21,5	26,0	63,5	55	46,7 x 2,8

Seria: LL = foarte uşoară L = uşoară S = grea – PN = Presiunea nominală PB = Presiunea max. de lucru – Ø d2 = diametru exterior ţeavă

Variante produs

VMO	Racord filetat tip tată, Oţel

În pofida controlului minuţios nu putem exclude eventualele informaţii eronate şi nu garantăm pentru datele cuprinse.