WRM-P
Raclor, WRM-P

Caracteristici

Tip constructiv	Raclor
Viteză de alunecare max.	0,8 m/s
Temperatură min.	-30 °C
Temperatură max.	80 °C
Medii	Uleiuri minerale
Montaj	Raclorul se deformează în formă de rinichi și se apasă pe nutul de preluare
Execuţie	Metric
Material	PUR
Utilizare	Instalație hidraulică



Toleranz / Tolerance			
d	D	L	C
h11	+0,20 0	+0,10 0	+0,20 0

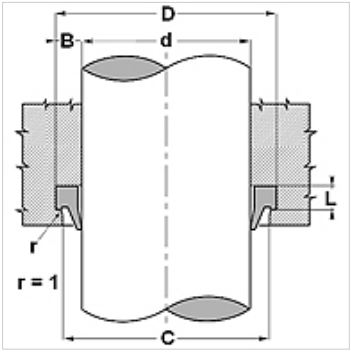

Descriere

Montare simplă
Soluție simplă.
Rezistență mare la frecare

Indicaţii referitoare comandă

În scurt timp vom putea produce racloare cu diametre de la 20 până la 510 mm.

Articol

Denumire	d (mm)	D (mm)	L (mm)	C (mm)
WRM-P 04	4	12,0	3,0	9,0
WRM-P 05-S	5	12,0	2,8	9,0
WRM-P 06-S	6	12,0	3,0	9,0
WRM-P 08	8	14,6	3,8	11,0
WRM-P 10	10	16,6	3,8	13,0
WRM-P 12	12	18,6	3,8	15,0
WRM-P 14	14	20,6	3,8	17,0
WRM-P 15	15	21,6	3,8	18,0
WRM-P 16-1	16	22,5	3,0	19,0
WRM-P 16	16	22,6	3,8	19,0
WRM-P 18	18	24,6	3,8	21,0
WRM-P 20-1	20	26,0	3,4	23,0
WRM-P 20	20	28,6	5,3	23,0
WRM-P 22	22	30,6	5,3	25,0
WRM-P 25	25	33,6	5,3	28,0
WRM-P 28	28	36,6	5,3	31,0
WRM-P 30	30	38,6	5,3	33,0
WRM-P 30-1	30	40,0	3,0	34,5
WRM-P 32-1	32	40,0	3,7	35,0
WRM-P 32	32	40,6	5,3	35,0
WRM-P 35	35	43,6	5,3	38,0
WRM-P 35-1B	35	45,0	4,0	39,0
WRM-P 36	36	44,6	5,3	39,0
WRM-P 38	38	46,6	5,3	41,0
WRM-P 38-1	38	48,5	4,8	41,0
WRM-P 40	40	48,6	5,3	43,0
WRM-P 42	42	50,6	5,3	45,0
WRM-P 45	45	53,6	5,3	48,0
WRM-P 45-1	45	55,6	5,3	48,0
WRM-P 45-1B	45	60,0	4,2	53,0
WRM-P 50	50	58,6	5,3	53,0
WRM-P 50-1	50	60,6	5,3	53,0
WRM-P 50-1B	50	65,5	4,2	58,0
WRM-P 55	55	63,6	5,3	58,0
WRM-P 55-1	55	65,6	5,3	58,0
WRM-P 56	56	64,6	5,3	59,0
WRM-P 56-1	56	66,6	5,3	59,0
WRM-P 60	60	68,6	5,3	63,0

În pofida controlului minuțios nu putem exclude eventualele informații eronate și nu garantăm pentru datele cuprinse.

Articol

Denumire	d (mm)	D (mm)	L (mm)	C (mm)
WRM-P 60-S	60	70,6	5,5	66,5
WRM-P 63	63	71,6	5,3	66,0
WRM-P 63-1	63	73,6	5,3	67,0
WRM-P 65	65	73,6	5,3	68,0
WRM-P 65-2	65	75,6	5,3	69,0
WRM-P 65-1	65	76,6	6,0	71,5
WRM-P 70	70	78,6	5,3	73,0
WRM-P 70-2	70	80,0	5,0	74,0
WRM-P 70-1	70	82,6	7,1	76,0
WRM-P 73-1	73	83,6	7,3	76,0
WRM-P 75	75	83,6	5,3	78,0
WRM-P 75-1	75	87,2	7,1	81,0
WRM-P 78-2	78	86,0	5,0	81,0
WRM-P 78-S	78	88,6	5,5	84,5
WRM-P 80	80	88,6	5,3	83,0
WRM-P 80-1	80	92,6	7,1	86,0
WRM-P 85-1	85	93,6	5,3	88,0
WRM-P 85	85	97,2	7,1	91,0
WRM-P 90	90	102,2	7,1	96,0
WRM-P 92-S	92	103,6	5,5	97,0
WRM-P 95	95	107,2	7,1	101,0
WRM-P 97-2	97	105,0	5,0	100,0
WRM-P 99	99	109,6	5,5	103,0
WRM-P 100	100	112,2	7,1	106,0
WRM-P 105	105	117,2	7,1	111,0
WRM-P 110	110	122,2	7,1	116,0
WRM-P 115-1	115	123,6	5,3	118,0
WRM-P 115	115	127,2	7,1	121,0
WRM-P 120-S	120	130,6	5,5	126,5
WRM-P 120	120	132,2	7,1	126,0
WRM-P 125	125	137,2	7,1	131,0
WRM-P125-1	125	140,2	10,1	132,0
WRM-P 130-1	130	138,6	5,3	133,0
WRM-P 130	130	142,2	7,1	136,0
WRM-P 135	135	147,2	7,1	141,0
WRM-P 140-2	140	148,6	6,0	143,0
WRM-P 140	140	152,2	7,1	146,0
WRM-P 140-1	140	155,0	9,0	147,0
WRM-P 141-S	141	151,6	5,5	147,5
WRM-P 145	145	157,2	7,1	151,0
WRM-P 150-2	150	158,6	5,3	153,0
WRM-P 150	150	162,2	7,1	156,0
WRM-P 150-1	150	165,0	7,5	156,0
WRM-P 150-3	150	165,2	10,1	158,0
WRM-P 160-1	160	172,2	7,1	166,0
WRM-P 160	160	175,2	10,1	167,6
WRM-P 162-S	162	172,6	5,5	168,0
WRM-P 170	170	185,2	10,1	178,0
WRM-P 180	180	195,2	10,1	188,0
WRM-P 180-2	180	200,0	7,0	188,0
WRM-P 180-3	180	200,0	10,2	190,0
WRM-P 183-S	183	193,6	5,5	189,0
WRM-P 190-2	190	198,6	5,3	193,0
WRM-P 190	190	205,2	10,1	198,0
WRM-P 190-1	190	210,0	10,1	200,0
WRM-P 200	200	215,2	10,1	208,0
WRM-P 200-3	200	220,0	10,2	210,0
WRM-P 220	220	235,2	10,1	228,0
WRM-P 220-1	220	240,0	10,1	230,0
WRM-P 230	230	245,2	10,1	238,0
WRM-P 240	240	255,2	10,1	248,0
WRM-P 300-5	300	315,2	10,1	308,0

În pofida controlului minuțios nu putem exclude eventualele informații eronate și nu garantăm pentru datele cuprinse.