GAR ABS
Raclor, GA-R

HANSA-FLEX

Caracteristici

Tip constructiv	Raclor
Viteză de alunecare max.	0,5 m/s
Temperatură min.	-30 °C
Temperatură max.	100 °C
Medii	Uleiuri minerale Emulsii de apă
Montaj	se presează într-un nut deschis
Material	(1) Manșon: oțel (2) Raclor: 90° Shore A NBR
Utilizare	Instalație hidraulică

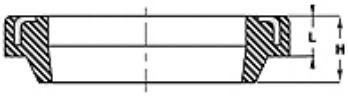

Toleranz / Tolerance		
d	D	L
h11	H8	+0,20 0

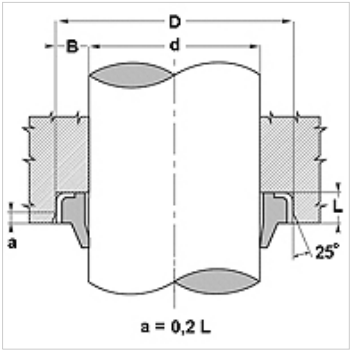

Descriere

Necesar de spațiu redus
Fără pătrunderea particulelor murdare prin inelul exterior metalic.
Soluție simplă.

Indicații referitoare comandă

Dacă se utilizează în condiții de lucru speciale (lichid, temperatură, presiune...), vă rugăm să ne contactați.
Alt material posibil: FPM.

Articol

Denumire	d (mm)	D (mm)	L (mm)	H (mm)
GA 12 18-3-R	12	18,0	3,5	5,0
GA 14 20-3-R	14	20,0	3,5	5,0
GA 15 21-3-R	15	21,0	3,5	5,0
GA 16 22-3-R	16	22,0	3,5	5,0
GA 18 28-5-R	18	28,0	5,0	7,0
GA 20 30-5-R	20	30,0	5,0	7,0
GA 22 32-5-R	22	32,0	5,0	7,0
GA 25 35-5-R	25	35,0	5,0	7,0
GA 28 38-5-R	28	38,0	5,0	7,0
GA 30 40-5-R	30	40,0	5,0	7,0
GA 30 40-7-R	30	40,0	7,0	10,0
GA 32 42-5-R	32	42,0	5,0	7,0
GA 36 46-5-R	36	46,0	5,0	7,0
GA 40 50-5-R	40	50,0	5,0	8,0
GA 42 52-5-R	42	52,0	5,0	7,0
GA 45 55-5-R	45	55,0	5,0	7,0
GA 50 60-5-R	50	60,0	5,0	7,0
GA 55 65-5-R	55	65,0	5,0	7,0
GA 56 66-5-R	56	66,0	5,0	7,0
GA 60 70-5-R	60	70,0	5,0	7,0
GA 63 73-5-R	63	73,0	5,0	7,0
GA 65 75-5-R	65	75,0	5,0	7,0
GA 70 80-5-R	70	80,0	5,0	7,0
GA 75 83-7-R	75	83,0	7,0	10,0
GA 80 88-7-R	80	88,0	7,0	10,0
GA 80 90-7-R	80	90,0	7,0	10,0

În pofida controlului minuțios nu putem exclude eventualele informații eronate și nu garantăm pentru datele cuprinse.