# K-3 BKR L VA

3-way ball valves, L-bore

## Caracteristici

| | |
|---|---|
| **Presiune de lucru** | max. 63 bar |
| **Temperatura de lucru** | max. 160 °C |
| **Gaură** | Formă de L |
| **Valori orientative** | Up to 40 °C: 63 bar, 150 °C: 28 bar |
| **Garnitură de etanşare** | RTFE |
| **Manetă** | Stainless steel |
| **Ventil cu bilă** | Stainless steel 1.4408 |



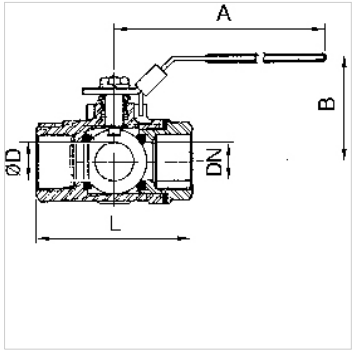


## Indicaţie

G thread acc. to DIN EN ISO 228-1, with ISO flange plate (acc. to ISO 5211)
Alte date sunt disponibile la cerere.

## Descriere

With L-bore, reduced bore. Version for sealing on all sides with integrated ISO flange plate (ISO 5211). The lever can be turned 360° to allow several switching variants.

## Indicaţii referitoare comandă

For use on devices that have to be vented whenever they are turned off, either because of safety regulations or for technical reasons. The pneumatic devices are disconnected from the system and simultaneously vented each time they are shut off.

## Informaţii suplimentare

G thread acc. DIN EN ISO 228-1

## Articol

| Denumire | DN | Filet | A (mm) | B (mm) | L (mm) | Ø D (mm) |
|---|---|---|---|---|---|---|
| **K- 07 30 15 02** | 8 | G 1/4 | 114,0 | 73,0 | 80,0 | 11,0 |
| **K- 07 30 15 03** | 10 | G 3/8 | 114,0 | 73,0 | 80,0 | 11,0 |
| **K- 07 30 15 04** | 15 | G 1/2 | 114,0 | 73,0 | 80,0 | 12,5 |
| **K- 07 30 15 05** | 20 | G 3/4 | 133,0 | 78,0 | 87,0 | 16,0 |
| **K- 07 30 15 06** | 25 | G 1 | 133,0 | 83,0 | 100,0 | 20,0 |
| **K- 07 30 15 07** | 32 | G 1 1/4 | 187,0 | 92,0 | 123,0 | 25,0 |
| **K- 07 30 15 08** | 40 | G 1 1/2 | 187,0 | 98,0 | 142,0 | 31,8 |
| **K- 07 30 15 09** | 50 | G 2 | 187,0 | 126,0 | 170,0 | 38,1 |

*În pofida controlului minuțios nu putem exclude eventualele informații eronate și nu garantăm pentru datele cuprinse.*