# K-BKR EINTEILIG VA

Ball valves

## Caracteristici

| | |
|---|---|
| **Presiune de lucru** | max. 55 bar (depending on connection size and temperature) |
| **Temperatura de lucru** | Max. 150 °C |
| **Garnitură de etanșare** | PTFE |
| **Manetă** | Stainless steel 1.4301 |

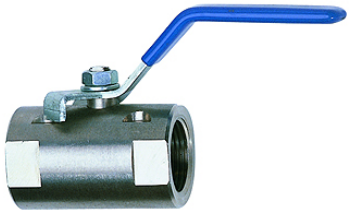

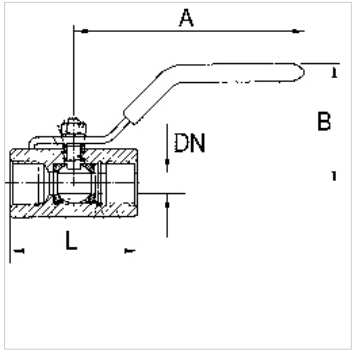


## Indicaţie

G thread acc. to DIN EN ISO 228-1, with ISO flange plate (acc. to ISO 5211)
Alte date sunt disponibile la cerere.

## Descriere

Full bore with G 1/4 to G 3/8, reduced bore with G 1/2 to G 2

## Indicaţii referitoare comandă

For use on devices that have to be vented whenever they are turned off, either because of safety regulations or for technical reasons. The pneumatic devices are disconnected from the system and simultaneously vented each time they are shut off.

## Articol

| Denumire | DN | Filet | A (mm) | B (mm) | L (mm) | Material |
|---|---|---|---|---|---|---|
| **K- 07 30 14 94** | 5 | G 1/4 | 60,0 | 30,0 | 39,8 | Stainless steel 1.4401/1.4408 |
| **K- 07 30 14 95** | 7 | G 3/8 | 80,0 | 33,0 | 44,8 | Stainless steel 1.4401/1.4408 |
| **K- 07 30 14 96** | 9 | G 1/2 | 110,0 | 57,0 | 56,5 | Stainless steel 1.4401/1.4408 |
| **K- 07 30 14 97** | 13 | G 3/4 | 110,0 | 61,0 | 60,0 | Stainless steel 1.4401/1.4408 |
| **K- 07 30 14 98** | 15 | G 1 | 124,0 | 70,0 | 70,0 | Stainless steel 1.4401/1.4408 |
| **K- 07 30 14 99** | 20 | G 1 1/4 | 152,0 | 75,0 | 77,6 | Stainless steel 1.4401/1.4408 |
| **K- 07 30 15 00** | 25 | G 1 1/2 | 150,0 | 80,0 | 87,0 | Stainless steel 1.4401/1.4408 |
| **K- 07 30 15 01** | 32 | G 2 | 155,0 | 85,0 | 102,0 | Stainless steel 1.4401/1.4408 |

*În pofida controlului minuțios nu putem exclude eventualele informații eronate și nu garantăm pentru datele cuprinse.*