K-BKR STANDARD ZWEITEILIG VA

Ball valves

Caracteristici

Presiune de lucru	max. 70 bar (depending on temperature and nominal size)
1.1/4" to 1.1/2"	20 °C: 70 bar, 60 °C: 55 bar, 100 °C: 35 bar, 150 °C: 6 bar, 180 °C: 4 bar, 200 °C: 0 bar
1/4" bis 1"	20 °C: 70 bar, 60 °C: 65 bar, 100 °C: 45 bar, 150 °C: 7 bar, 180 °C: 4 bar, 200 °C: 0 bar
2"	20 °C: 60 bar, 60 °C: 40 bar, 100 °C: 30 bar, 150 °C: 5 bar, 180 °C: 4 bar, 200 °C: 0 bar
Temperatura de lucru	200 °C at 0 bar
Garnitură de etanşare	15 % RPTFE (glass fibre reinforced PTFE)
Manetă	Stainless steel 1.4301



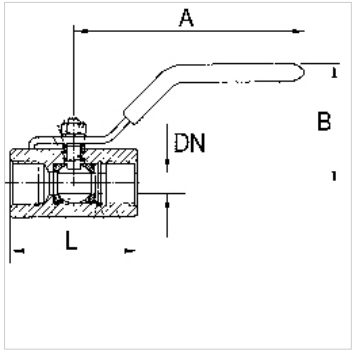

Indicaţie

G thread acc. to DIN EN ISO 228-1, with ISO flange plate (acc. to ISO 5211)
Alte date sunt disponibile la cerere.

Descriere

Full bore

Indicaţii referitoare comandă

For use on devices that have to be vented whenever they are turned off, either because of safety regulations or for technical reasons. The pneumatic devices are disconnected from the system and simultaneously vented each time they are shut off.

Informaţii suplimentare

G thread acc. DIN EN ISO 228-1

Articol

Denumire	DN	Filet	A (mm)	B (mm)	L (mm)	Material
K- 07 30 00 01	8	G 1/4	102,0	56,0	52,0	Stainless steel 1.4401/1.4408
K- 07 30 00 02	10	G 3/8	102,0	56,0	52,0	Stainless steel 1.4401/1.4408
K- 07 30 00 03	15	G 1/2	123,0	65,0	58,0	Stainless steel 1.4401/1.4408
K- 07 30 00 04	20	G 3/4	123,0	68,0	67,0	Stainless steel 1.4401/1.4408
K- 07 30 00 05	25	G 1	153,0	79,0	78,0	Stainless steel 1.4401/1.4408
K- 07 30 00 06	32	G 1 1/4	153,0	84,0	90,0	Stainless steel 1.4401/1.4408
K- 07 30 00 07	40	G 1 1/2	183,0	93,0	104,0	Stainless steel 1.4401/1.4408
K- 07 30 00 08	50	G 2	183,0	99,0	127,0	Stainless steel 1.4401/1.4408

În pofida controlului minuțios nu putem exclude eventualele informații eronate și nu garantăm pentru datele cuprinse.