# K-DBV MANO 1/4"

Pressure limiting valves size 1/4

## Caracteristici

| | |
|---|---|
| **Tip constructiv** | Spring-loaded, non-return diaphragm valve with adjustable opening pressure |
| **Temperatură mediu** | max. 60 °C |
| **Temperatură ambientală** | Max. 60 °C |
| **Material de etanşare** | NBR |
| **Apărătoare de arc** | POM/brass |
| **Carcasă** | Die-cast zinc, painted silver |
| **Membrană** | NBR |



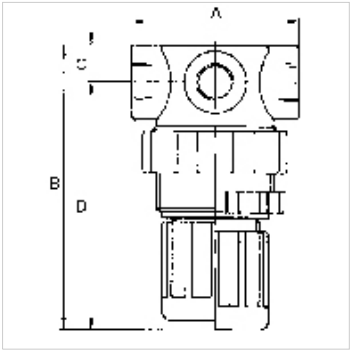


## Indicaţie

Alte date sunt disponibile la cerere.

## Descriere

Manually adjustable overflow valves.For protecting pneumatic systems against damage caused by excess pressure.

## Articol

| Denumire | Filet | Domeniu de reglare | A (mm) | B | C (mm) | D (mm) |
|---|---|---|---|---|---|---|
| **K- 07 25 01 93** | G 1/4 | 0.1 - 2.0 bar | 43,0 | 70,0 mm | 10,0 | 60,0 |
| **K- 07 25 01 94** | G 1/4 | 0.1 - 3.0 bar | 43,0 | 70,0 mm | 10,0 | 60,0 |
| **K- 07 25 01 95** | G 1/4 | 0.15 - 7.0 bar | 43,0 | 70,0 mm | 10,0 | 60,0 |
| **K- 07 25 01 96** | G 1/4 | 0.5 - 10.0 bar | 43,0 | 70,0 mm | 10,0 | 60,0 |

## Piese de schimb

| | |
|---|---|
| **K-HALTERBAUSATZ** | Holder |
| **K-SCHALTTAFELMUTTER** | Nut |
| **K-VERSCHLEI-SATZ** | Set of wearing parts |
| **K-SCHALLDAE SINTERBR AG 569** | Silencers, sintered bronze, flat type with male thread, 569 Series |
| **K-GERAETESTECKER** | Coupling socket |

*În pofida controlului minuțios nu putem exclude eventualele informații eronate și nu garantăm pentru datele cuprinse.*